Original instructions

Electric pallet truck

SXH-20

1609

first in intralogistics

11548011551 EN - 07/2016

Address of manufacturer and contact details ▷

STILL GmbH
Berzeliusstraße 10
22113 Hamburg, Germany
Tel. +49 (0) 40 7339-0
Fax: +49 (0) 40 7339-1622
Email: info@still.de
Website: http://www.still.de

1 Introduction

Your industrial truck 2
General 2
CE labelling 2
Copyright and property rights 2
EC declaration of conformity 3
Identification label 4
Permissible use 6
Description of use and climatic conditions 6
Unauthorised use 7
Explanation of symbols used 7
Disposing of components and batteries 7

2 Safety

Safety regulations 10
Safety regulations for handling consumables 11
Permissible consumables 11
Oils 11
Hydraulic fluid 12
Battery acid 12
Disposal of consumables 13
Emissions 14
Noise emission values 14
Vibration characteristics for vibrations to which the body is exposed 14
Residual dangers, residual risks 15
Stability 15
Definition of responsible persons 15
Operating company 15
Specialist 16
Drivers 16
Safety tests 17
Regular safety inspection of the truck 17

3 Overviews

Truck overview 20
Overview 20
Overview of the technical compartment 21

Control and display elements 22
Driver's compartment 22
Electronic key (option) 23
Display operating unit 25

Markings 26
Labels 26
Serial number 27

4 Use

Technical description 30

List of checks prior to start-up 31

Checks and actions prior to commissioning 32
Commissioning 32
Emergency off switch 32
Checking the brakes 33
Horn 33

Truck operating instructions 34

Entering/exiting the truck 35

Operator presence pedal 36

Using the display operating unit 37
Selection buttons 37
Displaying the drive wheel position 38
Operation of the display unit 38

Driving safety guidelines 43

Driving 44
Defining directions 44
Driving 44
Braking 45
Horn 46
Drive program 47
Driving on upward and downward slopes 48
Steering Knob option 48

Operating the FleetManager™ option 50
Description of the FleetManager option 50
Commissioning a truck equipped with the FleetManager™ option 51
FleetManager™ option: Colour code for the LEDs 52
Disconnecting a truck equipped with the FleetManager™ option 54

Transporting loads 56
Load handling safety rules 56
Grabbing a loading unit 56
Transporting pallets or other containers 57
Lift control elements 58
Handling a single load 59

Cold store usage 61
Cold store usage (optional) 61

Park the truck. 63

Handling the battery 64
Battery type 64
Order picking 64
Opening and closing the battery hood 65
Charging the battery using an external charger 66
Changing the side access battery 68

Handling the truck in an emergency 74
Truck towing procedure 74

Handling the truck in specific situations 76
Slinging the truck 76
Lifting the truck 77
Transporting the truck 77
Transporting the truck in the lift 78
Driving on loading bridges 78

5 Maintenance

General maintenance information 80
General 80
Servicing and maintenance personnel training and qualification 81
Battery maintenance staff 81
Maintenance operations that do not require special training 81
Ordering spare parts and consumables 81

Safety guidelines for maintenance 82
Servicing and maintenance measures 82
Working on the electrical equipment 82
Safety devices 82

Recommended lubricants 83
Technical data for inspection and maintenance 84
Accessing the technical compartment 85
Maintenance plan as required 87
1000-hour/annual maintenance plan 88
3000-hour/two-year maintenance plan 88
5000-hour maintenance plan 89
Chassis, bodywork and fittings 90
Cleaning the truck 90
General information on battery maintenance 91
Checking the condition of the load arms 92
Steering and wheels 93
Maintaining the wheels and rollers 93
Electrical equipment 94
Cleaning and blowing out the electrical components 94
Checking the fuses 94
Checking the battery acid level and electrolyte density 95
Checking the condition of cables, terminals and the battery connector 96
Hydraulic systems 97
Checking the hydraulic system for leaks 97
Checking the hydraulic oil level 97
Storage and putting out of commission 99
Storage of truck 99
Permanent Putting Out of Commission (Destruction) 100

6 Technical features

SXH 20 datasheet 102

1

Introduction

Your industrial truck

General

The truck described in these operating instructions corresponds to the applicable standards and safety regulations.

If the truck is to be operated on public roads, it must conform to the existing national regulations for the country in which it is being used. The driving permit must be obtained from the appropriate office.

The trucks have been fitted with state-of-the-art technology. All that remains is to handle the truck safely and maintain its functionality.

These operating instructions provide the necessary information to do this. Read and observe the information provided before commissioning the truck. This will prevent accidents and ensure that the warranty remains valid.

CE labelling

The manufacturer uses CE labelling to indicate that the truck complies with the standards and regulations valid at the time of marketing. The supplied EC declaration of conformity confirms this. The CE labelling is attached to the nameplate.

An independent structural change or an addition to the tow tractor can compromise safety, thereby invalidating the EC declaration of conformity.

The EC declaration of conformity must be carefully stored and made available to the responsible authorities.

▷

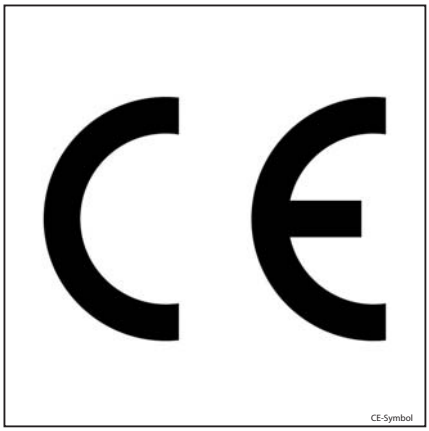

CE-Symbol

Copyright and property rights

This manual - and any excerpts thereof - may not be reproduced, translated or transmitted in any form to third parties without the express written permission of the manufacturer.

EC declaration of conformity

Declaration

STILL GmbH
Berzeliusstrasse 10
22113 Hamburg
GERMANY

We declare that the machine

Industrial truck	**according to these operating instructions**
Model	**according to these operating instructions**

conforms to the latest version of the Machinery Directive 2006/42/EC.

Person authorised to compile the technical documents:

See EC compliance declaration

STILL S.A.S.

The manufacturer declares that the truck complies with the requirements of the EC directives valid at the time of marketing. This is confirmed by the EC declaration of conformity and by the EC labelling on the nameplate.

An independent structural change or addition to the truck can compromise safety, thus invalidating the EC declaration of conformity.

The EC declaration of conformity must be carefully stored and made available to the relevant authorities.

Identification label

NOTE

Indicate the serial number for all technical enquiries.

▷

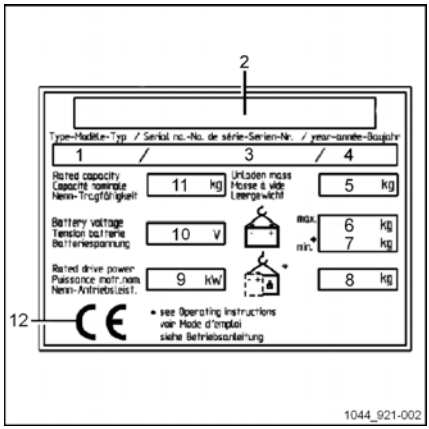

1	Model
2	Manufacturer
3	Serial number
4	Year of manufacture
5	Unladen weight (without battery) in kg
6	Battery maximum weight
7	Battery minimum weight
8	Additional weight (ballast) in kg
9	Nominal motor power (kW)
10	Battery voltage V
11	Rated capacity in kg
12	EC conformity symbol

Permissible use

The truck described in these operating instructions is suitable for lifting and transporting loads.

The truck should only be used for the purposes for which it was designed, as described in these instructions.

If the truck needs to be used for purposes other than those specified in these instructions, you should first:

- Obtain permission from the manufacturer
- Obtain permission from the competent authorities, if applicable

The purpose of obtaining these permissions in advance is to limit danger as far as possible.

Description of use and climatic conditions

Normal use

– Indoor and outdoor use.

– Ambient temperature in tropical and Nordic regions ranging from -10°C to 45°C

– Start capability from -10°C to 45°C.

– Maximum start time of 20 seconds

– Use at up to 2000 metres above sea level.

Special use (partly with special measures) for trucks equipped with Gel or Lead batteries

– Use, for example, in the event of abrasive dust (such as AL203), lint, acid, leach, salt and incombustible substances.

– Ambient temperature in tropical regions up to 55 °C.

– Start capability at -25°C.

– Use at up to 3,500 metres above sea level.

Unauthorised use

Any danger caused as a result of unauthorised use becomes the responsibility of the operator or driver and not that of the manufacturer.

Use for purposes other than those described in these operating instructions is prohibited.

Transporting people is prohibited.

The forklift truck should not be used in areas where there is a risk of fire, explosion or corrosion, or in areas that are particularly dusty.

Stacking or unstacking is not permissible on inclined surfaces or ramps.

Explanation of symbols used

DANGER

Compulsory procedure that must be followed to avoid life-threatening danger or physical harm.

WARNING

Compulsory procedure that must followed to avoid injury.

CAUTION

Compulsory procedure that must be followed to avoid damage to and/or destruction of equipment.

NOTE

For technical requirements that require special attention.

ENVIRONMENT NOTE

To prevent environmental damage.

Disposing of components and batteries

The truck is made up of different materials.

If components or batteries must be replaced and scrapped, they must be:

- disposed of
- treated or
- recycled in accordance with regional and national regulations

NOTE

The documentation provided by the battery manufacturer must be observed when disposing of batteries.

ENVIRONMENT NOTE

We recommend working with a waste management company when disposing of components and batteries.

2

Safety

Safety regulations

These instructions and the VDMA booklet, "Directives concerning the use of industrial trucks in compliance with the specifications and regulations", come with the truck and must be communicated to all those concerned and in particular to personnel responsible for maintenance and driving. The employer must make sure that the operator has properly understood everything, particularly all the safety information.

Please observe the directives and safety regulations attached, in particular:

- Information concerning the use of materials handling trucks
- Regulations concerning traffic lanes and working areas
- Appropriate behaviour, rights and responsibilities of the driver
- Use in particular areas
- Information about the weight and dimensions of pallets or any other container
- Information concerning starting, driving and braking
- Information concerning maintenance and repair
- Regular checks and technical inspections
- Recycling of lubricants, oils and batteries
- Residual risks.

Care is recommended both for the user and the person in charge (employer) with regard to adhering to all safety rules concerning the use of material-handling trucks.

When instructing forklift operators, we recommend the following points are emphasized:

- The features of the truck
- The special accessories
- The specific features of the working environment.

Train the user in how to drive the truck, until it is under proper control.

Then, and only then, proceed to transferring pallets.

Forklift truck stability is guaranteed when the unit is used correctly.

Safety regulations for handling consumables

Permissible consumables

⚠ WARNING

Consumables can be dangerous.

It is necessary to follow the safety regulations when handling these substances.

Refer to the maintenance data table for the permissible substances necessary for operation.

Oils

⚠ DANGER

Oils are flammable!

- Follow the statutory regulations
- Do not allow oils to come into contact with hot motor parts.
- No smoking, fires or flames!

⚠ DANGER

Oils are toxic!

- Avoid contact and consumption
- In case of inhalation of steam or fumes, breathe fresh air immediately.
- After contact with the eyes, rinse thoroughly with water (for at least 10 minutes) and then consult an eye specialist.
- If swallowed, do not induce vomiting. Seek immediate medical attention.

⚠ WARNING

Prolonged intensive contact with the skin can result in loss of skin oils and cause irritation.

- Avoid contact and consumption.
- Wear protective gloves!
- After any contact, wash the skin with soap and water and then apply a skin care product.
- Immediately change soaked clothing and shoes.

⚠ WARNING

There is a risk of slipping on spilled oil, particularly when combined with water!

- Collect spilled oil immediately using an oil-binding agent and dispose of it in accordance with regulations.

ENVIRONMENT NOTE

Oils are water pollutants!

Always store oil in containers that comply with the applicable regulations.

Avoid spilling oils.

Collect spilt oil immediately using an oil binding agent and dispose of it in accordance with regulations.

Dispose of old oils according to the applicable regulations.

Hydraulic fluid

WARNING

During operation of the forklift truck, hydraulic fluids are pressurised and are hazardous to your health.

- Do not spill these fluids!
- Follow the statutory regulations
- Do not allow the fluids to come into contact with hot motor parts.
- Do not allow to come into contact with the skin.
- Avoid inhaling the spray
- Penetration of pressurised fluids into the skin is particularly dangerous if these fluids escape at high pressure due to leaks in the hydraulic system. In case of such injury, seek medical advice immediately.
- To avoid injury, use appropriate personal protective equipment (e.g. protective gloves, industrial goggles, skin protection and skin care products).

ENVIRONMENT NOTE

Hydraulic fluid is a water-polluting substance!

Always store hydraulic fluid in containers complying with the regulations.

Avoid spilling.

Spilt hydraulic fluid should be removed with oil-binding agents at once and disposed of according to the regulations.

Dispose of old hydraulic fluid according to regulations.

Battery acid

WARNING

Battery acid contains dissolved sulphuric acid. This is toxic.

- Avoid contact and consumption.
- In case of injury, seek medical advice immediately.

WARNING

Battery acid contains dissolved sulphuric acid. This is corrosive.

- When working with battery acid, always wear protective clothing and eye protection.
- Do not allow any acid to get onto the clothing or skin or into the eyes; if this does happen, rinse immediately with plenty of clean water.
- In case of injury, seek medical advice immediately.
- Immediately rinse away spilt battery acid with plenty of water.
- Follow the statutory regulations

ENVIRONMENT NOTE

– Dispose of used battery acid in line with the applicable regulations.

Disposal of consumables

ENVIRONMENT NOTE

Materials that have to be disposed of following maintenance, repair and cleaning must be systematically collected and disposed of in accordance with regulations. Observe the national regulations for your country. Work may only be carried out in areas designated for this purpose. Take care to minimise, as far as possible, any impact on the environment.

- Any spillage of fluids such as hydraulic oil, brake fluid or gear lubricant oil must be immediately soaked up with an oil-binding agent.
- The regulations for disposal of used oil are applicable.
- Any spillage of battery acid must be neutralised immediately.

Emissions

Noise emission values

Calculated during the test cycle performed in accordance with standard EN 12053.

Acoustic pressure level on the driver's compartment			
SXH 20	L_{PAZ}	=	65 dB (A)
Uncertainty	K_{PA}	±	2.5 dB (A)

NOTE

Lower or higher noise values may occur when using industrial trucks, e.g. due to the mode of operation, environmental factors and other sources of noise.

Vibration characteristics for vibrations to which the body is exposed

The values were determined according to EN 13059 using trucks with standard equipment according to the datasheet (driving over test course with humps).

Specified characteristics for upper limb vibrations	
Vibration characteristics	< 2.5 m/s^2

NOTE

The vibration characteristics for bodily vibrations cannot be used to determine the actual load level of vibrations during operation. This depends on the operating conditions (state of ground, mode of operation etc.) and should therefore be determined on site, where appropriate. It is mandatory to specify the hand-arm vibrations even where the values do not indicate any hazard, as in this case.

Residual dangers, residual risks

Despite all operational precautions and compliance with standards and rules, the possibility of additional risks when using the truck cannot be entirely excluded.

The truck and all its components comply with the regulations relating to current applicable safety rules.

Persons in the vicinity of the truck must be particularly cautious and react immediately in the event of any malfunction, incident, breakdown etc.

⚠ WARNING

Personnel in contact with the truck must be informed of the risks related to using the truck.

These operating instructions draw your attention to the safety rules.

The risks are:

- Escape of consumables due to leaks, ruptured lines and tanks etc.
- Risk of accident when driving over difficult ground such as slopes, soft or irregular surfaces or in poor visibility etc.
- Falling, tripping etc. when moving on the industrial truck, especially in the wet, with leaking consumables or icy surfaces.
- Loss of stability due to the load being unstable or the load slipping etc.
- Risk of fire and explosion due to batteries and electrical voltages.
- Human error - Disregarding safety regulations.

It is important to adjust the speed of the truck depending on the load and ground conditions.

The stability of the truck has been tested to the latest standards. These standards only take account of the static and dynamic tilting forces that can arise during operation that complies with the specifications and operating rules. Risks caused by misuse or incorrect operation that jeopardise the stability cannot be ruled out in extreme situations.

Stability

Stability is only guaranteed if the industrial truck is used according to the indicated recommendations.

It is not guaranteed in the event of:

- cornering at high speeds
- moving with a load that is protruding to the side (e.g. sideshift)
- turning and driving diagonally on descents or ascents
- driving on descents or ascents with the load on the downhill side
- loads that are too wide or too heavy
- driving with an unstable load
- ramp edges or steps.

Definition of responsible persons

Operating company

The operating company is the natural or legal person or group who operates the truck or on whose authority the truck is used.

The operating company must ensure that the truck is only used for its intended purpose and in compliance with the safety guidelines set out in these operating instructions.

The operating company must ensure that all users read and understand the safety information in these instructions.

The operating company is responsible for the scheduling and correct performance of regular safety checks.

It is recommended that these checks comply with national performance specifications.

Specialist

A specialist is deemed to be:

- A person whose experience and technical training has allowed him to develop relevant knowledge of industrial trucks
- A person who is also familiar with national health and safety regulations and generally recognised technical directives and conventions (standards, VDE regulations, technical regulations of other European Union member states or countries that are signatories to the treaty that established the European Economic Area). This expertise allows him to assess the condition of industrial trucks in terms of health and safety

Drivers

This truck may only be driven by suitable persons who are at least 18 years of age, have been trained in driving, have demonstrated their skills in driving and handling loads, and have been specifically designated to drive the truck. Specific knowledge of the truck is also necessary.

Driver rights,duties and rules of behaviour

The driver must be duly informed of his rights and duties.

The driver must be granted the required rights.

The driver must wear protective equipment (protection suit, safety helmet, industrial goggles and protective gloves) that is appropriate for the conditions, the task and the load to be lifted. The driver must also wear safety footwear to be able to drive and brake in complete safety.

The driver must be familiar with the operating instructions and have access to them at all times.

The driver must:

- Have read and understood the operating instructions
- Have familiarised himself with safe operation of the truck
- Be physically and mentally able to drive the truck safely

⚠ DANGER

The use of drugs, alcohol or medications that affect reactions impair the ability to drive the truck.

Individuals under the influence of the above-mentioned substances are not permitted to perform work of any kind on or with the truck.

Prohibition of use by unauthorised persons

The driver is responsible for the truck during working hours. He must not allow unauthorised persons to operate the truck.

When leaving the truck, the driver must secure it against unauthorised use.

Safety tests

Regular safety inspection of the truck

Safety inspection based on time and extraordinary incidents ▷

The operating company (see chapter entitled "Definition of responsible persons") must ensure that the truck is checked by a specialist at least once a year or after noteworthy incidents.

As part of this inspection:

- A full check of the technical condition of the truck in terms of accident safety must be performed
- The truck must be thoroughly checked to detect any damage that may have been caused by improper use
- A test log must be created.

The results of the inspection must be retained until at least a further two inspections have been carried out.

The inspection date is indicated by an adhesive label on the truck.

– Arrange for the service centre to perform periodic safety inspections on the truck.

– Observe the guidelines for tests carried out on the truck in accordance with FEM 4.004.

The operator is responsible for ensuring that any defects are remedied immediately.

– Contact your service centre.

NOTE

Observe the regulations in force in your country.

0000_003-001_V3

3

Overviews

Truck overview

Overview

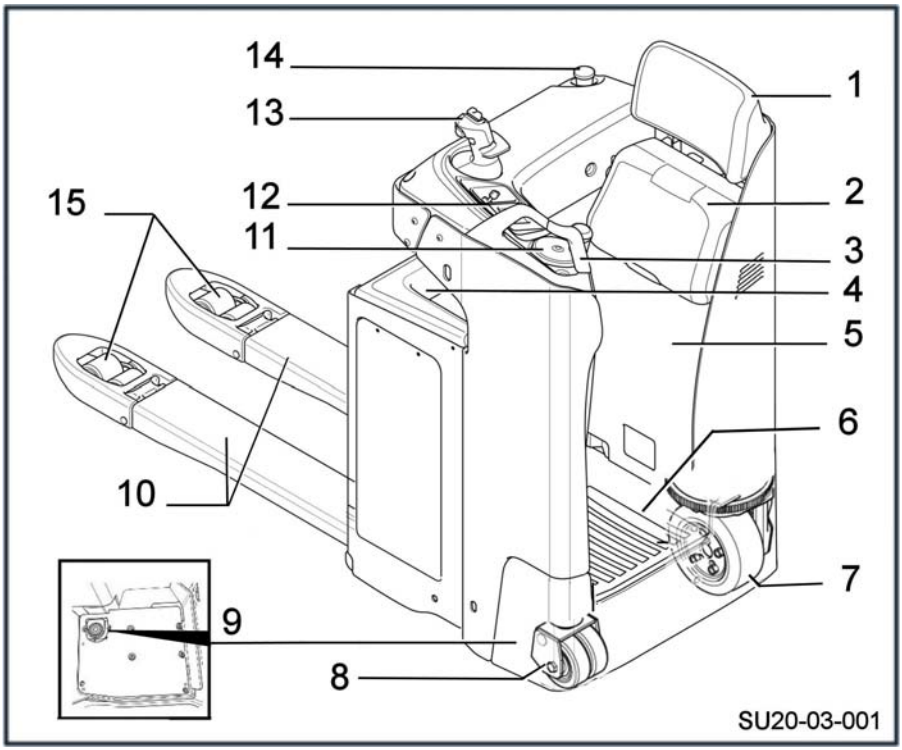

1	Backrest	9	Operator presence pedal
2	Support	10	Load arms
3	Lifting/lowering handle	11	Steering wheel
4	Battery hood	12	Switch key or electronic key and display block
5	Technical compartment	13	Control module
6	Platform	14	Emergency off switch
7	Drive wheel	15	Load wheels
8	Stabiliser wheels		

Overview of the technical compartment

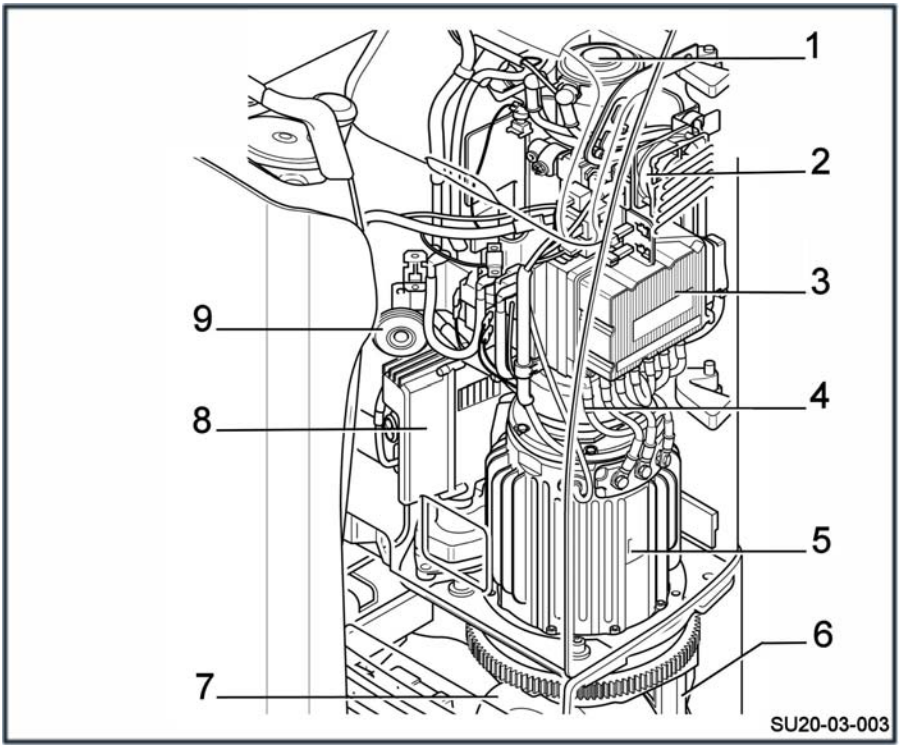

1	Pump-motor unit	6	Transmission gear
2	Fan	7	Drive wheel
3	Steering controller	8	ES30–24 steering unit
4	Electromagnetic brake	9	Horn
5	Traction motor		

Control and display elements

Driver's compartment

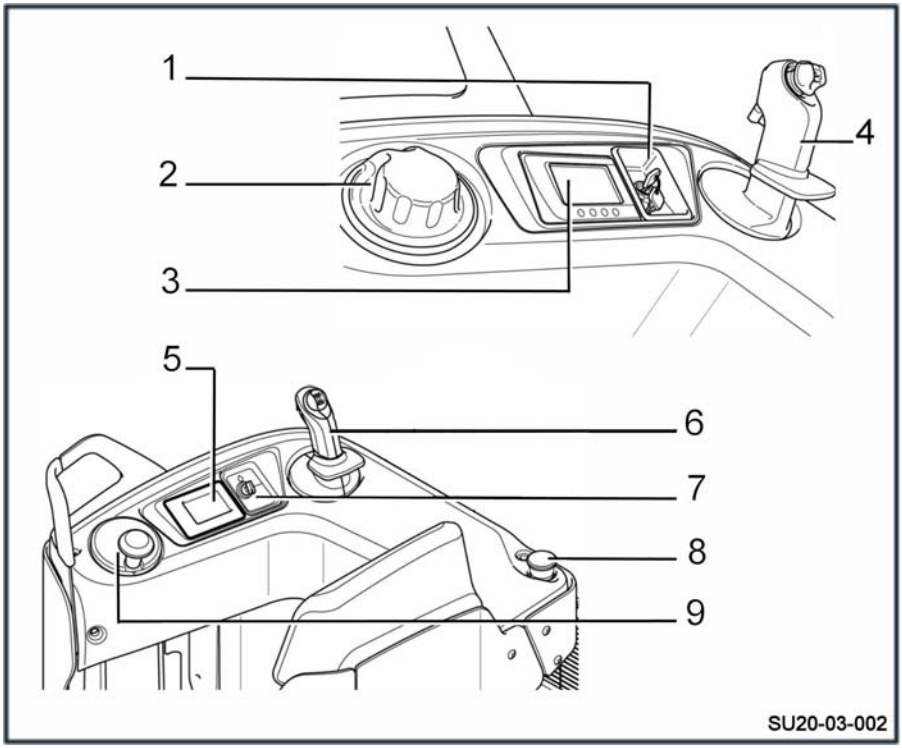

1	Switch key (or electronic key)	6	Control unit
2	Control button (Steering Knob device)	7	Switch key (or electronic key)
3	Display	8	Emergency off switch
4	Control unit	9	Steering wheel
5	Display		

Electronic key (option)

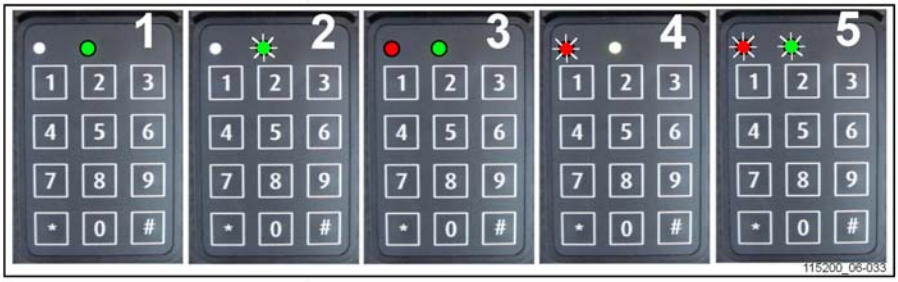

1 Switch ON (operating mode)
2 Switch OFF and awaiting code
3 Programming mode active
4 Key fault or incorrect code
5 Time delay of automatic switch-off

Operation	Enter	Status of LEDs	Comments
USE			
ON	* 1 2 3 4 5 # (by default)	○ red off ● continuous green (1) (correct PIN) ● red flashing ○ green off (4) (incorrect PIN)	1 2 3 4 5 default PIN
OFF	# (3 seconds)	○ red off ● green flashing (2)	Truck power off

PROGRAMMING (truck switch OFF only (2))			
ADMINISTRATOR CODE ESSENTIAL FOR ALL ELECTRONIC KEY SETTINGS	* 0 0 0 0 0 0 0 0 # (by default)	● continuous red ● continuous green (3)	Once the LEDs have gone out, the electronic key automatically reverts to "operating mode".
New operator code	* 0 * 4 5 6 7 8 #	○ red off ● green flashing (2) (code accepted)	Example of new operator code: 45678
Allocating operator codes	* 2 * 5 4 3 2 1 #	○ red off ● green flashing (2) (code accepted)	*2*: operator reference 10 options from 0 to 9
Deleting operator codes	* 2 * #	○ red off ● green flashing (2) (deletion accepted)	*2*: operator reference (between 0 and 9)
Modifying administrator codes	* * 9 * 1 2 3 4 5 6 7 8 #	○ red off ● green flashing (2) (code accepted)	

PROGRAMMING (truck switch OFF only (2))			
Restoring the initial administrator code			To reactivate the default administrator code (00000000), please contact your agent or nearest dealer.
Activating the automatic switch-off	* * 2 * 1 #	● red flashing ● green flashing (5) (5 seconds before switch-off)	Power switches off automatically after 10 minutes (600 seconds by default) if the truck is not in use.
Setting the time delay of the automatic switch-off	* * 3 * 6 0 #	○ red off ● green flashing (2) (value accepted)	Example: automatically switches off after 1 minute (60 seconds) if not in use. Minimum setting = 10 seconds/maximum = 3000 seconds
Deactivating the automatic switch-off	* * 2 * 0 #	○ red off ● green flashing (2) (command accepted)	

Display operating unit

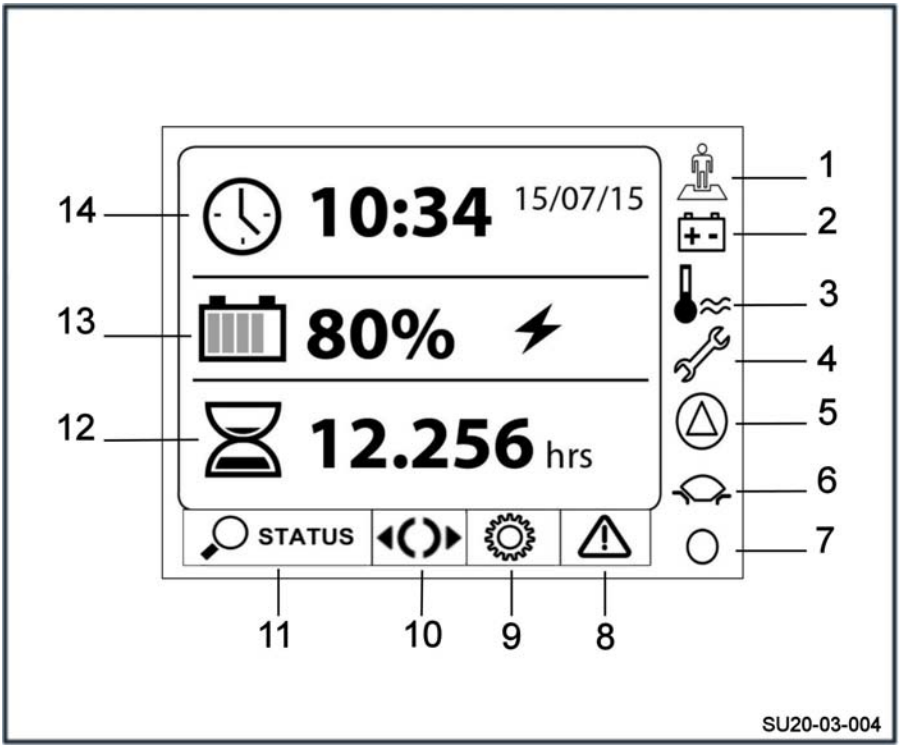

1	Operator present light	8	Error Code menu
2	Battery indicator light	9	Settings menu
3	Temperature indicator light	10	Drive wheel position menu
4	Settings indicator light	11	Truck status menu
5	Warning indicator light	12	Display of the operating time of the truck
6	Drive programme indicator light	13	Display of the battery charge
7	Activity indicator light	14	Display of the date and time

For more information, refer to Chapter 4 **Using the display operating unit**.

Markings

Labels

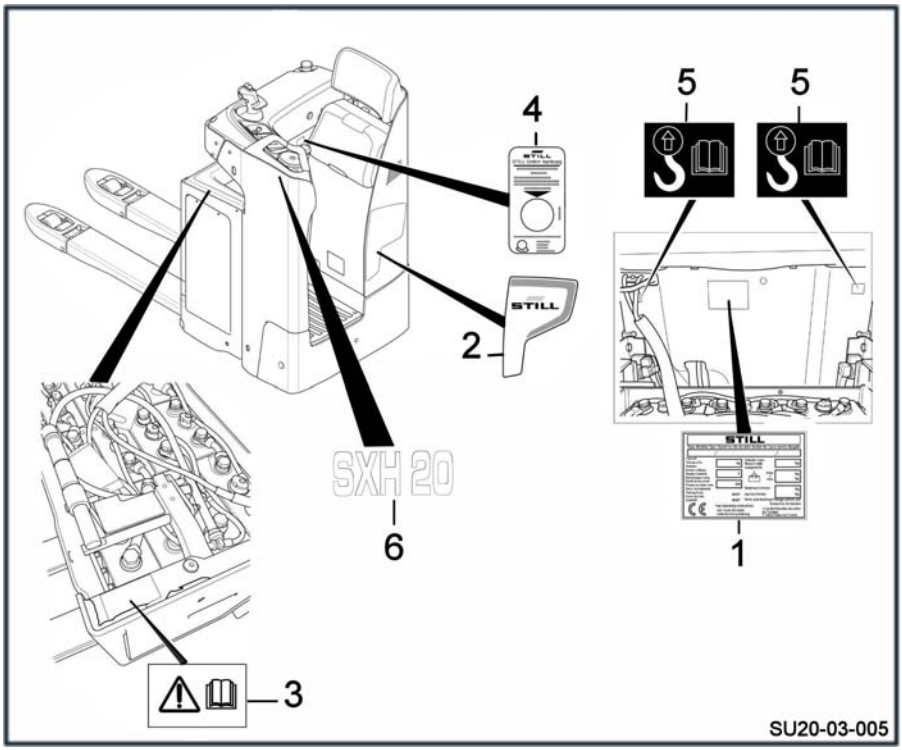

1 Identification label
2 Brand label
3 Danger instructions label Consult operating instructions
4 Next inspection label
5 Slinging label Consult operating instructions
6 Model label

Serial number

NOTE

Indicate the serial number for all technical enquiries.

The serial number contains the following information:

1 Production location

2 Type

3 Year of production

4 Count number

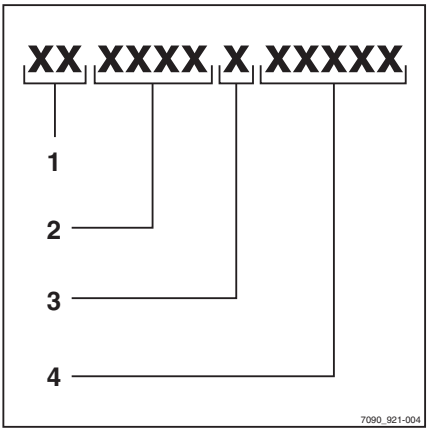

4

Use

Technical description

Pallet truck SXH 20 is used for transporting pallets and/or containers in small spaces.

The following model is available:

- SXH 20: 2000 kg

Features

During ride-on driving, this pallet truck provides the operator with good visibility. The operator can cover long distances safely.

- 10 **km/h** unladen
- 10 **km/h** laden

Drive system

The truck drive system comprises:

- 3,0 kW traction motor
- Microprocessor controller to control traction and lift
- ES30–24 steering unit
- A 1,2 kW pump-motor unit

Batteries

Power is supplied by a lead battery with a capacity of 375 Ah or 500 Ah for side access batteries only.

Steering

The electric steering offers driving precision and easier manoeuvring.

The truck is equipped with a 0,185 kW asynchronous steering motor.

The steering is controlled with a steering wheel and a control module.

The drive unit is mounted on a turntable. Steering is provided by an electric geared motor that positions the turntable.

The steering motor is controlled by an impulse control system. This system receives information from the steering wheel and the wheel angle position. The speed of the truck is automatically reduced when cornering.

Braking

The truck is equipped with an electromagnetic brake system.

Driver's compartment

The driver's compartment includes:

- A steering wheel and a control module
- A switch key
- A display
- An emergency off switch
- An operator presence pedal
- A truck raising/lowering handle

Optional equipment available:

- Electronic key
- FleetManager™
- Steering wheel on the left or the right
- A control module on the left or the right depending on the position of the steering wheel
- Cold store (-35°C)

List of checks prior to start-up

⚠ WARNING

Damage or other defects on the truck or attachments (special equipment) can result in accidents.

If damage or other faults are noticed on the truck or attachments (special equipment) during the following inspections, do not use the truck until it has been properly repaired. Do not remove or disable the safety systems and switches. Do not change the pre-set values.

Before start-up, ensure that the truck operates correctly.

To do this, perform the following checks:

- The load arms must not show any signs of noticeable damage (for example: bending, cracks, significant wear).
- Check that there are no signs of leaking consumables under the truck.
- Do not restrict the field of vision. Ensure the visible area specified by the manufacturer is observed.
- Attachment parts (special equipment) must be properly secured and function according to their operating instructions.
- Damaged or missing stickers must be replaced in compliance with the marking position table.
- The roller channels must be coated in a visible layer of grease.
- The wheels must show no signs of defects or heavy wear. They must be mounted correctly.
- Check that there are no foreign objects that could hinder the operation of the wheels and rollers.
- The warning devices (horn etc.) must work.
- The battery hood must be closed.
- Check that the hoods are correctly positioned.
- The operator must be qualified to drive the truck. The operator must be able to reach the controls and operate them (especially the anti-crush device). Do not obstruct access to the controls.

Please inform your supervisor if you notice any defects.

Checks and actions prior to commissioning

Commissioning

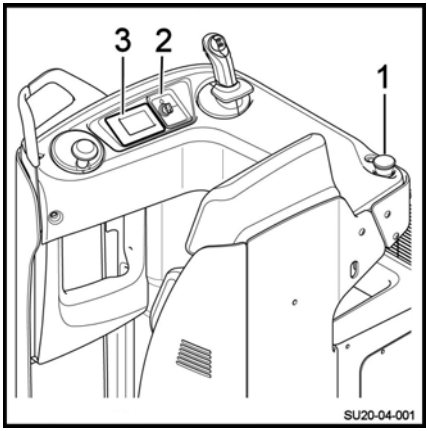

NOTE

Check that no commands are activated before switching on the truck.

- Check that the battery is connected and locked and that the hood is closed correctly.
- Enter the truck.
- Adjust the backrest.
- Pull the emergency off switch (1).
- Turn the key (2). For models equipped with an electronic key, enter the 5-digit PIN code to start the truck.
- Press the operator presence pedal.

The display (3) lights up. The truck is now ready for use.

Emergency off switch

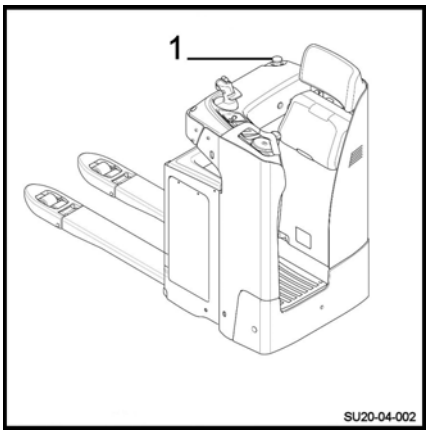

To check the operation of the emergency off switch, proceed as follows:

- Press the emergency off switch (1).

The truck power supply is cut. The electrical controls and motors are no longer supplied with power.

- Pull the emergency off switch (1).
- Start the truck (key or electronic key).

The functions are available again.

Checking the brakes

Braking by releasing the drive switch

▷

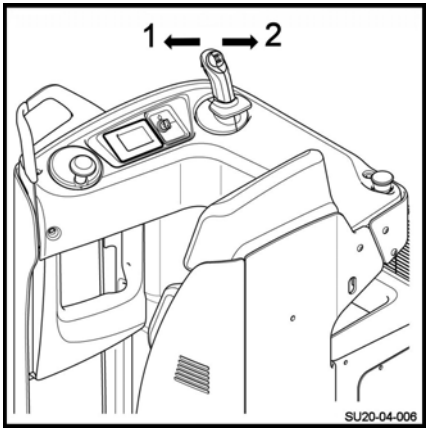

– Drive the truck in direction (1) or (2).

– Release the drive switch.

The brake is activated until the truck stops completely.

Braking by reversing the drive direction

– Drive the truck in direction (1) or (2).

– Move the drive switch in the opposite direction.

The truck slows down and then moves off in the opposite direction.

NOTE

Also ensure the stabiliser wheels operate correctly. This influences braking effectiveness.

Horn

▷

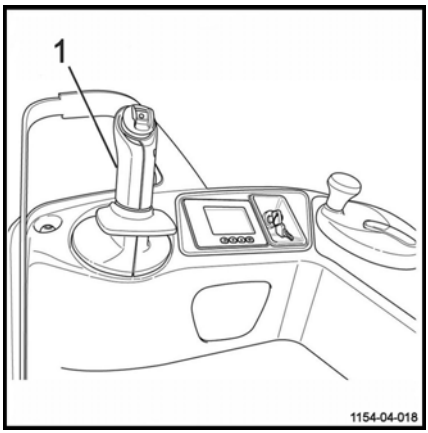

The horn is located on the rear side of the control module.

To check the operation of the horn, proceed as follows:

– Press the button (1) on the control module.

The horn sounds.

Truck operating instructions

The trucks are designed for indoor and outdoor use in non-hazardous atmospheres. The temperature should be between -10°C and +45°C and the relative humidity of the air less than 95%.

NOTE

A cold store option is available for lower temperatures.

The places where the truck is used must comply with the applicable regulations (condition of the ground, lighting etc.).

The trucks must be used on dry, clean and flat ground.

Before using the truck, it is essential to check the working environment. This check can take the form of visual inspection.

The work area must be clear. The truck's path must be free of obstacles and people.

The forklift operator must be alert to anything that might prevent manoeuvres being carried out safely. The following may create a potential danger:

- A person near the truck
- The forklift operator must not use an MP3 player or any other electrical equipment that could impair awareness of his/her surroundings
- There must be no signs of oil or grease on the floor

The forklift operator must take care when transporting a load. The load dimensions can interfere with manoeuvres and restrict the field of vision. The speed of the truck must also be reduced as the truck could tip over when breaking or cornering.

The loads must be consistent, with a maximum recommended height of 2 m.

For uses other than those shown above, please consult the After-Sales Service Centre.

It is important to use pallets that are in good condition.

Speed must be reduced when moving over obstacles to prevent the truck from becoming unbalanced and vibrations in the forklift operator's arms.

The trucks can drive across ramps and shallow inclines. With an initial lift, they can cross larger obstacles.

WARNING

Risk of loss of stability

– Always adapt your driving to the ground conditions (uneven surfaces etc.), particularly hazardous working areas and the load.

NOTE

- *To prevent the bottom of the load lift system from scraping the ground, always move the load arms to the raised position before setting off*
- *Always switch off the ignition before leaving the truck*

WARNING

Risk of injury

Always keep your hands on the controls. Never put your hands near moving parts and assemblies without first lowering the load arms to the ground and disconnecting the battery.

For effective protection, safety shoes must be worn.

WARNING

Driving safety guidelines:

– The driver must drive slowly around corners and when entering narrow passageways.
– The driver must always maintain a safe braking distance from vehicles or people in front of him.
– The driver must avoid stopping suddenly, making U-turns too quickly and overtaking in dangerous areas with poor visibility.

CAUTION

Risk of injury

Before using a side access truck, check that the battery is correctly locked.

Entering/exiting the truck

▷

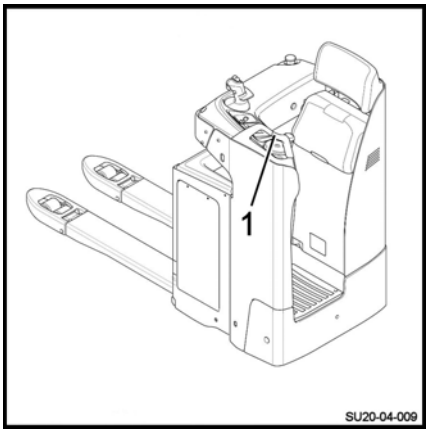

⚠ WARNING

Risk of falling, tripping or slipping when entering/exiting the truck.

- Hold the handhold (1) when entering or exiting the truck.
- Pay attention to the step.

⚠ DANGER

Risk of injury

To avoid accidental start-up, do not use the control module as a handle. Please use the handle.

⚠ CAUTION

Risk of damaging the equipment

- Never pull on the steering wheel or control module when climbing onto the truck.

Excessive force on these components can damage them and cause a malfunction.

Operator presence pedal

▷

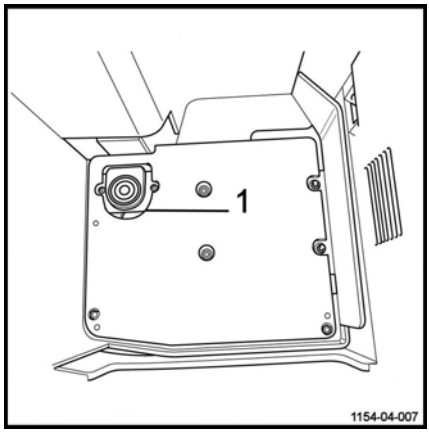

Pressing the operator presence pedal (1) enables the truck functions.

If the operator presence pedal (1) is released while the truck is moving, it brakes and slows to a stop.

Releasing the operator presence pedal (1) activates the parking brake.

DANGER

Risk of accident.

Do not keep the operator presence pedal pressed down with equipment or weights.

NOTE

Use your left foot to press the operator presence pedal.

Using the display operating unit

Selection buttons

The operator selects the menus using the four selection buttons:

- The **Blue Q**(1) button to select Blue Q mode or Tortoise mode
- The **left arrow** button (2) to scroll left through the drop-down menu
- The **right arrow** button (3) to scroll right through the drop-down menu
- The **Confirm** button (4) to confirm the highlighted choice on the screen

Displaying the drive wheel position

The truck operator can find out the position of the drive wheel by referring to the display.

Proceed as follows:

- Press the **left arrow** or **right arrow** button to scroll through the menu.
- Select the **Wheel** menu(2).
- Press the **Confirm** button (1).

The position of the drive wheel is shown on the display (3).

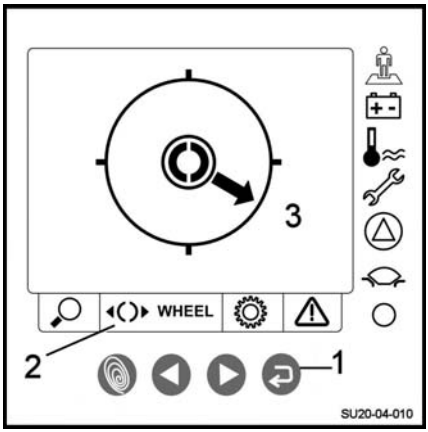

Operation of the display unit

Operator present

The **Operator present**(1) light switches on when the operator steps onto the detection platform.

It switches off immediately afterwards.

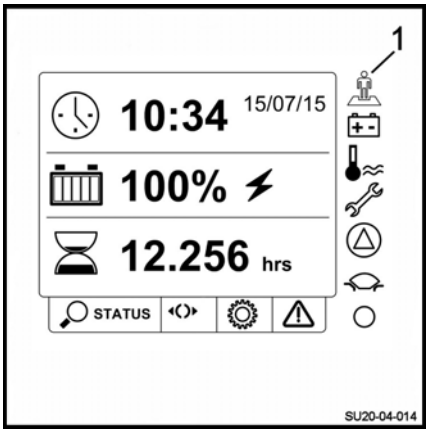

Managing battery charging

The operating unit shows the battery charge level.

The operator can refer to the battery icon (1) or (2).

The number of bars shown indicates the battery charge level.

- From 0 to 20%: 1 bar
- From 21 to 40%: 2 bars
- From 41 to 60%: 3 bars
- From 61 to 80%: 4 bars
- From 81 to 100%: 5 bars

The **Battery** light (3)switches on in the event of a deep discharge of the battery or in the event of a fault.

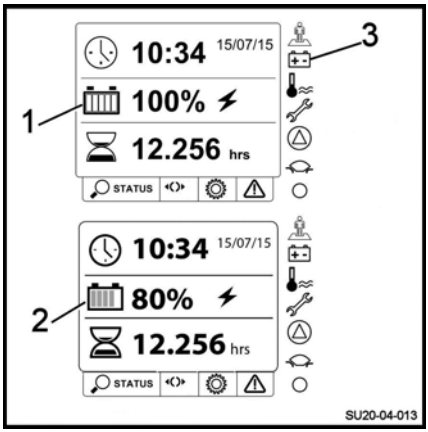

Temperature, Settings and Warning lights

The **Temperature**(1) light switches on in the event of overtemperature of the traction motor or the controller.

A warning is shown on the display.

The **Settings** light (2)switches on to show the date of next maintenance.

A warning is shown on the display.

The **Warning** light (3) switches on in the event of a fault in a component of the truck.

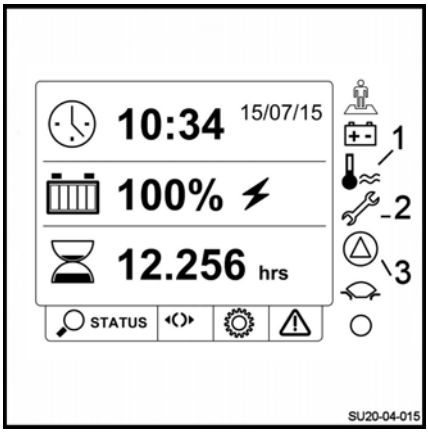

Drive programme

The **Drive programme** light (1) is permanently switched on when a travel mode is selected.

There are three different drive modes:

- Tortoise mode (2)
- Hare mode (3)
- Blue-Q mode (4)

The icon of the drive mode selected appears on the display.

– Select the desired drive mode using the navigation keys.

Activity indicator

The **Activity indicator** light (1) flashes constantly while the truck is in operation.

When the indicator is off, the display unit is locked or frozen. A warning is shown on the display.

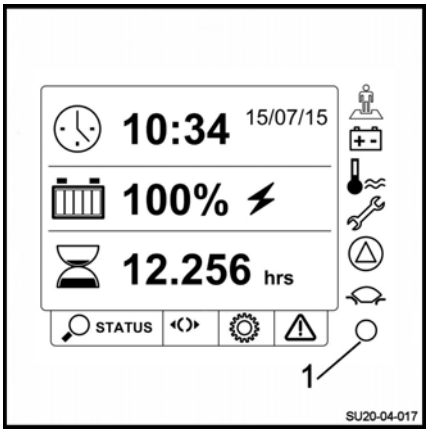

Settings menu

It is possible to access different settings through the Settings menu.

– Select the **Settings** menu (1).

This menu allows access to a drop-down menu consisting of:

- Language
- Unit
- Date format
- Date
- Time
- Adjust the contrast
- Adjust the brightness

– Select the desired choice.

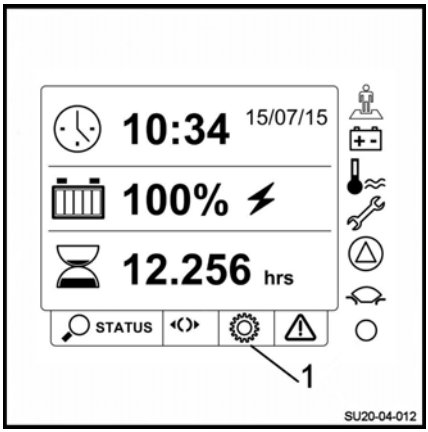

Error codes menu

It is possible to access the error messages that disrupt the truck's operation.

– Select the **Error messages** menu (1).

The operator has access to the error codes. If several codes are affecting the truck, the operator can scroll through several successive displays.

The number of error messages is indicated at the bottom of the display (2).

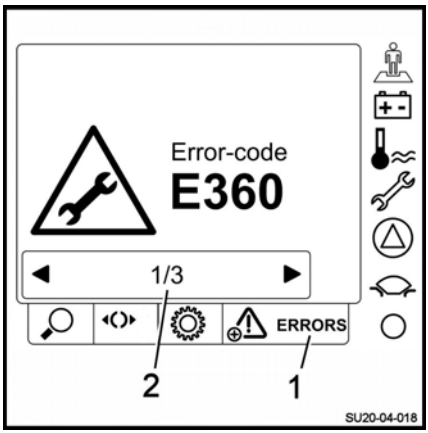

The start-up screen

In addition to the various menus and lights mentioned above, additional data is available:

- The **Truck status** menu (1) displays the truck's menu
- The **Hourglass** icon (2) indicates the operating time of the truck
- The **Clock** icon (3) indicates the time and date

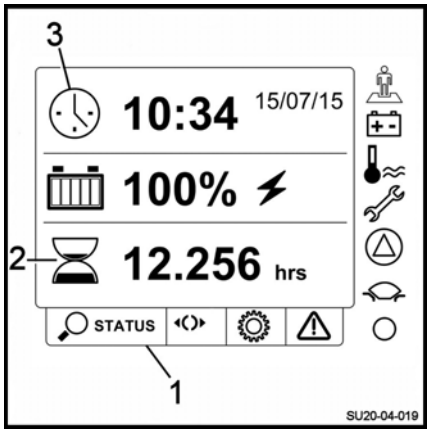

Driving safety guidelines

Behaviour when driving

Operators must obey the same rules within the plant as on the road. They must drive at speeds appropriate for the driving conditions.

Therefore, they must drive slowly:

- When cornering
- Through narrow passageways
- Through swing doors
- In low-visibility areas
- When the roadway is uneven

They must also:

- Always maintain a safe braking distance from vehicles or people in front of them
- Always maintain control of the truck
- Avoid stopping suddenly
- Avoid making fast U-turns
- Avoid overtaking in potentially hazardous or low visibility areas

Driving the truck while sitting on the dashboard is prohibited. The operator must be resting against the seat.

This truck is designed to be used as a pallet truck. Therefore:

- The truck must not be used as a stepladder
- The truck is not designed to transport people
- The operator must always remain inside the driver's compartment of the truck
- Stay in the safety area (working area defined by the manufacturer)
- Ensure the stability of the truck Do not exceed its maximum capacity

Use of a telephone or radio on the truck is permitted. However, do not use these devices when driving as they may distract you.

Take a test drive on an open surface.

NOTE

Safety shoes must be worn.

Driving

Defining directions

Names used in the text refer to the component installation position with respect to the driver's compartment.

- Reverse travel (1)
- Forward travel (3)
- Right (2)
- Left (4)

The load is positioned at the rear.

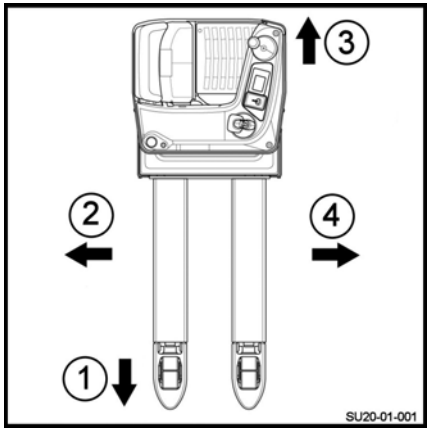

Driving

WARNING

Be aware of the position of the drive wheel

Slowly start the truck.

Check the position of the drive wheel on the display.

NOTE

Always operate the drive switch slowly, as the truck reacts immediately. Abrupt starts, braking or reversal of drive direction must be avoided at all costs.

The drive switch is located on the control unit.

NOTE

Always keep your hands in the driver's compartment while the truck is moving.

Forward travel

- Using your thumb, push the drive switch to the left (1) to travel forwards (opposite fork direction).
- When the drive switch is released, the truck brakes electrically.

Reverse travel

- Using your thumb, push the drive switch to the right (2) to travel backwards (fork direction).
- When the drive switch is released, the truck brakes electrically.

WARNING

Restricted visibility

During reverse travel, visibility may be restricted. Be very careful. Make sure that the path behind is clear before travelling backwards.

Reversing the drive direction

- Push the drive switch in direction (1) or (2).
- Release the drive switch.
- Operate it progressively in the opposite direction until the required speed is reached.

▷

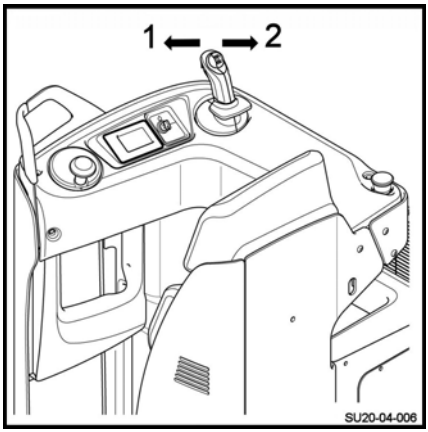

Braking

WARNING

The quality of the floor surface affects the braking distance of the truck.

This should be taken into consideration when driving.

Braking by reversing the drive direction

– Move the drive direction switches (1) or (2) in the opposite drive direction.

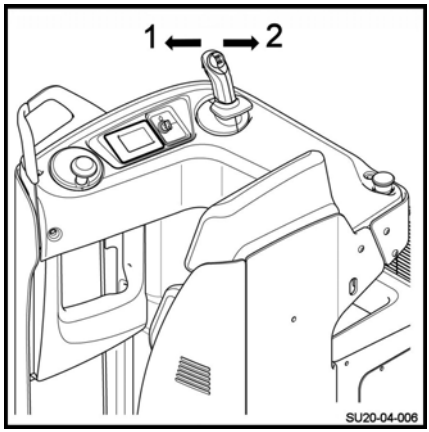

Braking by releasing the drive switch

– While travelling, completely release the drive switch.

The brake is automatically activated. The truck comes to a standstill.

Electromagnetic braking

The electromagnetic brake is activated automatically if one of the following conditions is met:

- The operator releases the operator presence pedal
- The drive switch is in the neutral position
- The power supply is cut off
- The operator presses the emergency off switch

Horn

The horn is positioned on the rear side of the control module.

It is used:

- On routes where there is poor visibility
- At junctions
- In the event of immediate danger

– Press the button (1) on the control module.

The horn sounds.

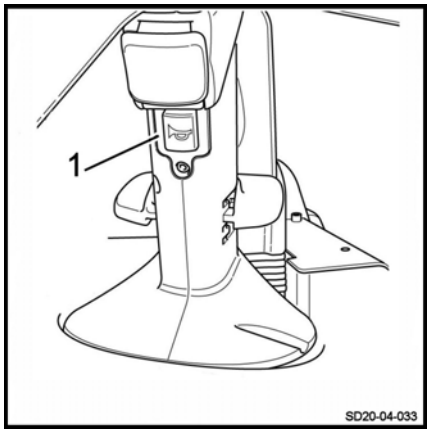

Drive program

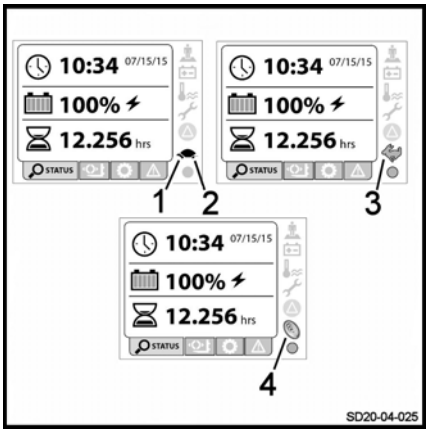

The indicator light (1) is on during operation of the truck. The shape of the indicator light indicates the selected program.

The truck is equipped with three different drive programs:

- Hare mode (3)
- BlueQ mode (4)
- Tortoise mode (2)

NOTE

When the operator restarts the truck, the last mode selected is automatically activated.

NOTE

The drive program is instantly changed. If the operator changes mode while driving the truck, he must remain vigilant.

Hare mode

When Hare mode is selected on the screen, the truck operates at its maximum performance.

Blue Q mode

Selecting Blue Q mode allows you to slightly reduce the performance of the truck:

- The travel speed of the truck is reduced (70% of maximum speed)
- The speed of lifting and lowering the forks is reduced (90% of maximum speed)

This mode allows you to save battery.

Tortoise mode

Selecting Tortoise mode allows you to reduce the performance of the truck:

- The travel speed of the truck is reduced to 6 km/h
- The speed of lifting and lowering the forks is considerably reduced

The different speeds can be adjusted. Contact the After-Sales Service Centre to change these.

Driving on upward and downward slopes

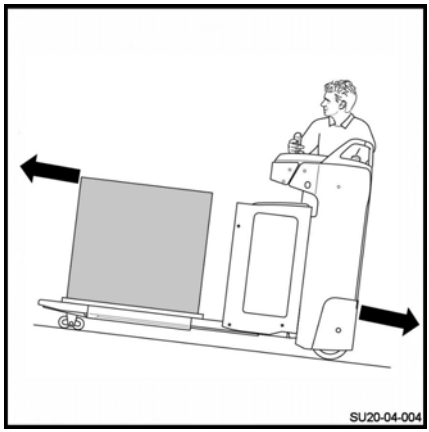

Slopes should always be approached with the load facing towards the top of the slope.

Only slopes

- Marked as traffic routes
- And compatible with the truck's technical specifications can be safely used

The operator must ensure that the ground is clean and has a non-slip surface.

Never travel across slopes or make a U-turn on a slope.

Do not park the truck on a slope. Reduce speed when going down slopes.

Please observe the maximum gradients defined as suitable for laden and unladen transport.

Steering Knob option

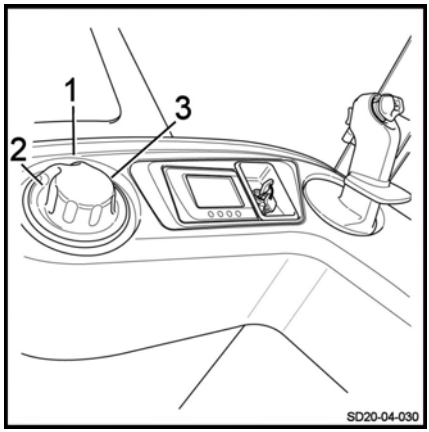

The Steering Knob device can replace the steering wheel controls.

⚠ WARNING

Risk of sharp truck movement

The Steering Knob device is highly sensitive. It is important to handle the turning knob with caution.

The turning knob allows you to adjust the position of the wheel. There is no need to reposition it when driving if the trajectory is straight.

When the button is positioned in the centre at the zero point (1), the truck travels in a straight line.

Two stops, one on the left (2) and one on the right (3), delimit the axis of rotation. The operator adjusts the turning knob within this axis to drive.

In forward travel (opposite load arm direction)

- Move the turning knob to the left (anti-clockwise) (2) to turn to the left
- Move the turning knob to the right (clock-wise) (2) to turn to the right

In reverse travel (load arms direction)

- Move the turning knob to the left (anti-clockwise) (2) to turn to the right
- Move the turning knob to the right (clock-wise) (2) to turn to the left

Operating the FleetManager™ option

Description of the FleetManager option

The FleetManager option allows you to control access to the truck. The option is a fleet management system.

You can access the system:

- Either by using a keypad
- Or by using a reading device for a transponder or an RFID card

The fleet manager sets the access details via the web interface. This affects the transponder cards or PIN codes for the corresponding trucks. It is possible to change the amount of time for which the access authorisation is valid.

Software is also available.

Additional options:

- Shock sensor
- Tools for wireless data management:
  ▸ GSM[2]GPRS[1] module with antenna

The options available on the truck are:

- Access control
- Access control and shock sensor
- Access control and GPRS module
- Access control, shock sensor and GPRS module

[1] GPRS: General Packet Radio Service

[2] GSM: Global System for Mobile Communication

Shock sensor

This sensor allows you to record the shocks received by the truck.

If the truck receives a shock, it is possible to configure a speed reduction.

The fleet manager is the only person who is able to change certain parameters.

NOTE

Replace the sensor if it is faulty.

GSMGPRS module

The module consists of a GSM modem and an antenna.

The module allows you to:

- Access truck information remotely
- Use geolocation

The data is stored on a server.

Data is transmitted by Bluetooth (default) or by GSM module (optional).

Commissioning a truck equipped with the FleetManager™ option

Commissioning a truck equipped with a keypad or an electronic key

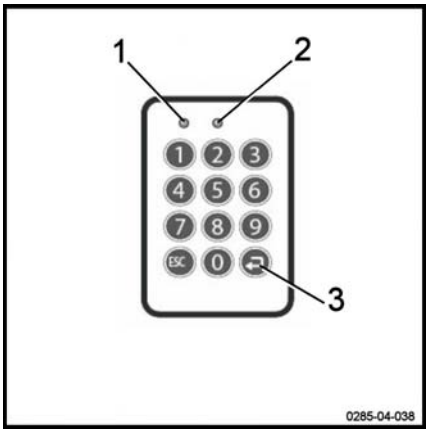

– Turn the switch key to start the truck.

– Enter the PIN code on the keypad. The PIN code consists of five to eight digits.

By default, no PIN code is given as a factory setting.

If the PIN code is correct, the LED (1) is not lit. The LED (2) flashes slowly at two-second intervals (green colour).

No acoustic signal sounds.

– Press the Enter key (3) to confirm.

The truck is now ready for use.

NOTE

In the configuration, the fleet manager can specify that the operator must enter a preliminary code when logging in. The operator can then assess the state of the truck.

Commissioning a truck equipped with an RFID reading device

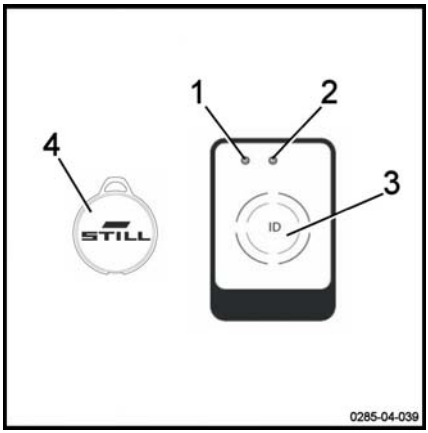

– Turn the switch key to start the truck.

– Place the RFID transponder card or the RFID transponder (4) in front of the reading device (3).

If the card is correct, the LED (1) is not lit. The LED (2) flashes slowly at two-second intervals (green colour).

Two acoustic signals sound.

The truck is now ready for use.

FleetManager™ option: Colour code for the LEDs

The LEDs can have different statuses and different colours. Below is the list of the most common messages and their meanings.

Malfunction			Cause	Solution
LED status		Signal transmitter		
LED 1	LED 2			
Lit continuously Red colour	Off	A long acoustic signal sounds	**Reading device variant:** no valid access authorisation	Generate a valid access authorisation using the interface
			Keypad variant: no valid access authorisation for the PIN code entered	
			Keypad variant: PIN code entered incorrect or not confirmed using the Enter key	Re-enter the PIN code
Lit continuously Red colour	Flashes once Green colour	A long acoustic signal sounds	The operator has been granted access authorisation. But the period of validity has expired.	Use the interface to enter a new period of validity
			The date of the truck is incorrect	Update the date of the truck
Flashes quickly Yellow colour	Lit continuously Green colour		Memory is 80% full	Clear the memory
Flashes quickly Red colour	Flashes quickly Red colour	A long acoustic signal sounds upon activation	There are several possible causes: - Reading device or keypad not accessible - GPRS module not accessible - Built-in rechargeable battery flat - Memory full	Contact the After-Sales Service Centre

Malfunction			Cause	Solution
LED status		Signal transmitter		
LED 1	LED 2			
Flashes quickly Red colour	Lit continuously Green colour		A shock has occurred	Reset the shock
Flashes quickly Blue colour	Off		The truck is connected via a Bluetooth link. The operating data is being read. The reading process can take up to five minutes.	The truck is switched on but is not moving. Wait for all of the relevant data to be read. As soon as the LEDs change to a different status, resume work.

Disconnecting a truck equipped with the FleetManager™ option

NOTE

Operators must not log off intentionally while driving.

WARNING

Access to the truck must be disabled.

Unauthorised users are not allowed to use the truck.

Disconnecting a truck equipped with a keypad or electronic key

▷

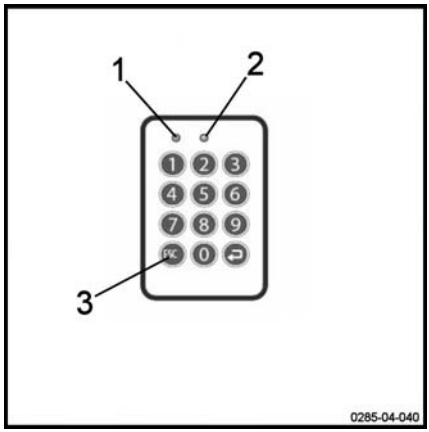

– Park the truck in a safe place.

– Press the button (3) to log off. Keep the button pressed in.

No LEDs light up. A long acoustic signal sounds.

The LED (1) lights up for a second (red colour). The LED (2) is not lit. A long acoustic signal sounds.

The LED (1) is no longer lit. The LED (2) flashes slowly at two-second intervals (green colour). No acoustic signal sounds.

The truck is disabled.

– Turn the switch key to the off position to switch the truck off completely.

Disconnecting a truck equipped with an RFID reading device ▷

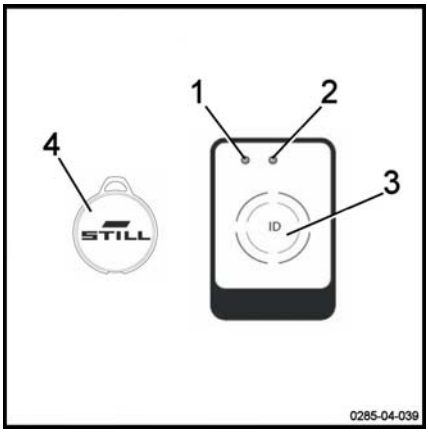

– Park the truck in a safe place.

– Briefly place the RFID card or the RFID transponder (4) in front of the reading device (3).

The LED (1) lights up for a second (red colour). The LED (2) is not lit. A long acoustic signal sounds.

The LED (1) is no longer lit. The LED (2) flashes slowly at two-second intervals (green colour). No acoustic signal sounds.

The truck is disabled.

– Turn the switch key to the off position to switch the truck off completely.

Transporting loads

Load handling safety rules

▷

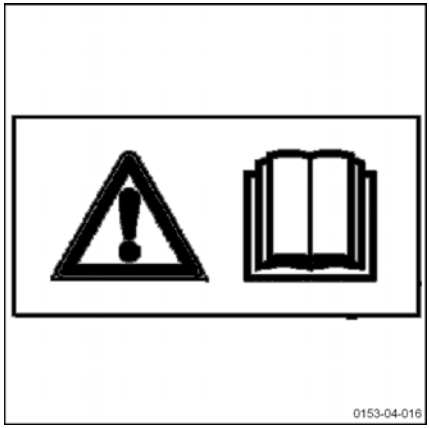

⚠ WARNING

Carefully observe the following instructions before picking up loads. Never touch or stand on moving parts of the truck (e.g. lifting device, pushing devices, work installations or devices for picking up loads).

⚠ WARNING

Take care not to trap hands or feet when operating the truck.

Grabbing a loading unit

▷

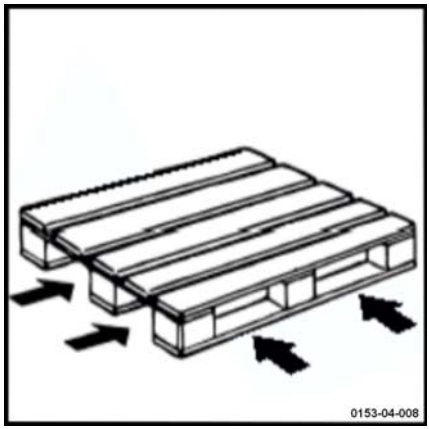

Watch out for the following elements:

- the load must be well-balanced and centred correctly between the fork arms
- the fork arms must be sufficiently slid underneath the load to guarantee stability.

The load must not protrude too far over the fork arms, nor should the fork arms protrude too far out from the load.

Transporting pallets or other containers ▷

As a general rule, loading units must be transported one by one (e.g. pallets). Transporting several loading units at a time is only authorised:

- when the safety preconditions are fulfilled.
- by order of the monitoring agent.

The forklift operator must ensure that the loading unit is properly packaged. He must only move loading units that have been carefully prepared and that meet the safety requirements.

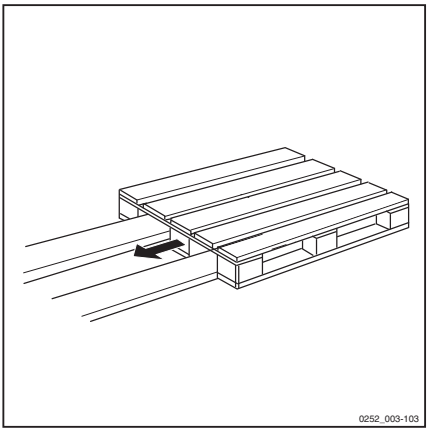

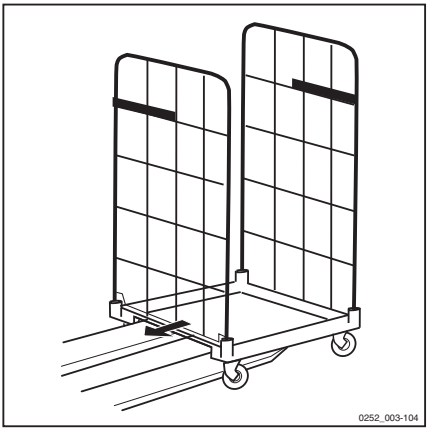

Lift control elements

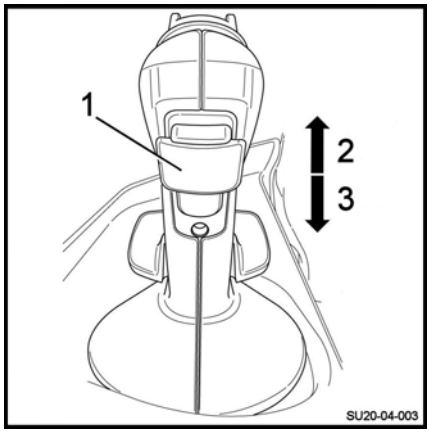

WARNING

Risk of injury

The safety instructions must be strictly adhered to.

Do not touch or stand on moving parts (e.g. lifting device, pushing devices, work installations, load lifting devices).

Lifting of load arms

– Start the truck.

– Push the control (1) upwards (2).

When the control (1) is released, the load arms stabilise at the required height.

Lowering of load arms

– Start the truck.

– Pull the control (1) downwards (3).

When the control (1) is released, the load arms stabilise at the required height.

Handling a single load

Before picking up a load

Ensure that the load weight does not exceed the truck's capacity.

- Refer to the nominal capacity specified on the truck's capacity label
- You must also make sure that the load is stable, well-balanced, attached firmly and centred between the fork arms in order to avoid dropping any part of the load
- Check that the width of the load is compatible with the width of the fork arms
- Check that the load is not damaged

⚠ CAUTION

Risk of injury

Safety shoes must be worn.

Transporting people is strictly prohibited.

⚠ DANGER

Risk of tipping

It is essential to slow down when approaching a corner or on wet surfaces.

⚠ CAUTION

Arrangement of loads

Do not touch nearby loads or loads positioned at the side or in front of the load being handled.

Arrange the loads with a small space between them to prevent them coming into contact with one another.

Picking up a load from the ground

– Use the initial lift to raise a load of up to 2000 kg several centimetres from the ground.

Transporting a load

Observe the following recommendations:

- Always drive forwards for optimum visibility
- Always travel up or down slopes with the load uphill Never travel across the slope or make a U-turn
- Reverse travel is used for depositing the load As visibility in reverse travel is restricted, drive at creep speed
- Never drive with an unstable load
- If visibility is poor, let someone guide you
- Be careful of low passageways, low doorways, scaffolding, pipes, etc.
- To move past obstacles, slightly raise the fork arms
- Check that the width of the load is not greater than the width of the aisle

▷

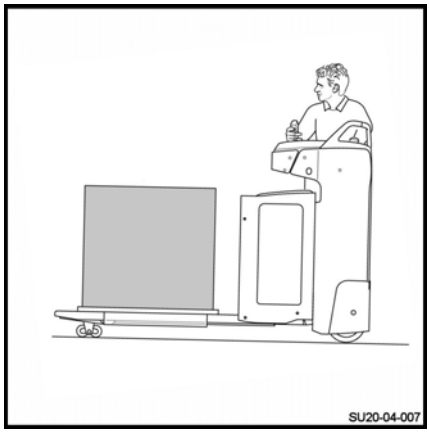

Setting a load down on the ground

Proceed as follows:

– Drive the machine to the required location.

– Carefully move the load into the unloading area.

– Lower the load until the fork arms are freed.

– Withdraw the machine in a straight line.

– Raise the fork arms again several centimetres.

⚠ CAUTION

Risk of falling

Do not touch nearby loads or loads positioned behind the truck.

⚠ CAUTION

Risk of accident

Before you remove the load, ensure that no one is around the truck or load.

Cold store usage

Cold store usage (optional)

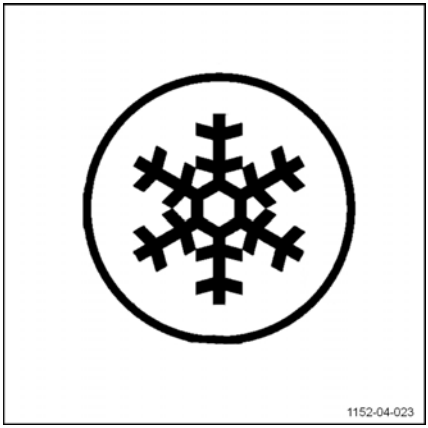

⚠ CAUTION

Standard trucks risk being subject to significant damage if used in extreme conditions.

Only trucks with the Cold Store option may be used inside cold storage. Specific oil designed for cold stores must be used.

These trucks are identified by their Cold Store label.

Area of Use

Trucks with the Cold Store option may be used in two different areas:

- **operating range 1**: the truck can operate at a temperature of -5 °C and, for short periods, at a temperature of -10 °C. It must be parked outside of the cold store.
- **operating range 2 (Entry / Exit applications)**: the truck must be used alternately inside and outside of the cold store. It can withstand temperatures between -30 °C and +45 °C. Specific rules should be followed so as not to damage the truck and to avoid the occurrence of streaming (see the following paragraph). The truck is parked outside of the cold store.

Precautions for Use

The difference in temperature between the cold store and the room temperature zone may result in the formation of condensation water.

This water can freeze when the truck goes back into the cold store and jam the moving parts of the truck.

Streaming occurs if the truck remains outside of the cold store for more than ten minutes. Therefore, it is essential to leave the truck outside of the cold store for 30 minutes so that the condensation disappears.

DANGER

If the condensation freezes in the cold store, it is prohibited to operate the jammed parts.

This could cause permanent damage to the truck.

Parking

The truck must be parked outside of the cold store.

Parking inside the cold store could cause serious damage to the electrical and mechanical equipment (seals, hoses, rubber and synthetic parts).

CAUTION

Do not leave discharged or unused batteries in the cold store.

They could be permanently damaged.

Park the truck.

⚠ WARNING

Risk of injury

Do not stop the truck on a slope. If this is absolutely necessary, make sure it is safely secured using chocks.

Stopping the truck

- Immobilise the truck.
- Lower the load arms.
- Switch off the ignition (key or electronic key).
- Press the emergency off switch.

Restarting work

- Switch on the ignition again (key or electronic key).
- Press the operator presence pedal.
- Pull the emergency off switch.

Handling the battery

Battery type

Trucks can be fitted with different types of battery. Comply with the information indicated on your battery's type plate, as well as with its features.

WARNING

The weight and size of the battery influence the stability of the truck.

The new battery must weigh the same as the old one. Do not remove extra weight or change its position.

CAUTION

Be careful not to damage any wiring when replacing the battery.

Order picking

Maintenance personnel

The battery must be replaced by specially trained personnel. Personnel must follow the manufacturer's instructions for the battery, the charger and the truck.

It is also necessary to follow the battery maintenance instructions.

Fire protection measures

WARNING

Do not smoke or create a flame when handling batteries. There must be no combustible material or tools that produce sparks within a minimum radius of 2 m around the truck and the battery charger.

The work area must be well ventilated. Fire extinguishers must be provided and located near the work area.

Parking the truck securely

When the battery is being worked on, the truck must be parked safely. The truck can only be restarted when the covers and connectors have been put back in the operating position.

Opening and closing the battery hood

Opening the battery hood

To open the battery hood:

- Immobilise the truck.
- Lower the load arms.
- Switch off the ignition (key or electronic key).
- Press the emergency off switch.
- Lift the hood (1) using the handle designed for this purpose.

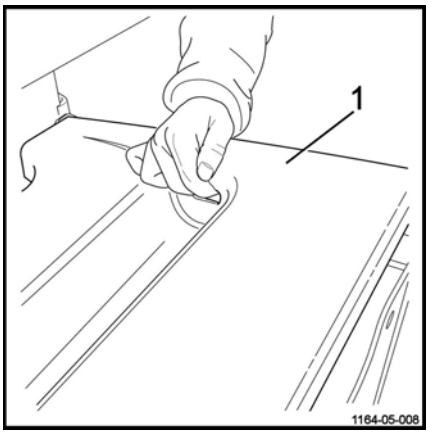

Closing the battery hood

To close the battery hood:

WARNING

Risk of trapping fingers

When closing the battery hood, correctly position your fingers to avoid any risk of them being trapped.

- Close the hood (1).
- Ensure that the battery hood is closed securely.

CAUTION

Risk of sparks

Never drive with the hood open or incorrectly closed.

Charging the battery using an external charger

CAUTION

The battery may be damaged if discharged beyond a given limit.

– Charge the battery immediately.

– Park the truck safely.

– Before charging, check the condition of the battery cable and the charger cable. Replace them, if necessary.

– Open the hood and leave open.

– Remove the battery handle connector (1) from the truck plug (2).

– Connect the battery connector to the wall-mounted connector.

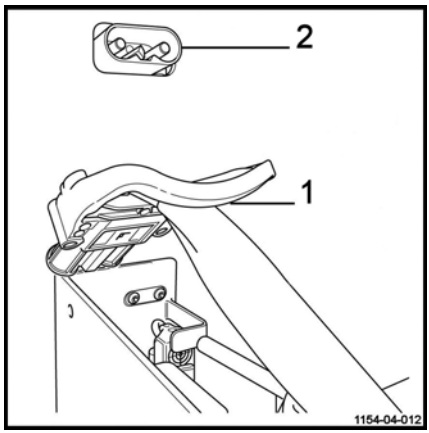

WARNING

Electrical hazards

Only unplug the battery connector from the battery charger when both the battery charger and truck are switched off.

NOTE

Follow the instructions provided by the battery and battery charger manufacturers (equalising charge).

WARNING

Risk of damage, short circuit or explosion.

Do not place any metallic objects or tools on the battery.

Do not smoke.

WARNING

The electrolyte (diluted sulphuric acid) is toxic and very caustic.

Follow the safety regulations when handling battery acid.

⚠ WARNING

Explosive gases are generated during battery charging.

Make sure the work area is well ventilated.

Make sure that the battery hood remains open for the entire time the battery is charging.

Changing the side access battery

DANGER

Risk of trapping fingers

It is advisable to wear gloves when changing the battery.

WARNING

Risk of injury

Safety shoes must be worn when changing the battery.

Before handling, ensure that there is nobody around the truck.

To remove the battery, we recommend that you use a fixed roller frame or a truck with extraction rollers (fitted with rollers) for easier handling of the battery.

To change the battery, proceed as follows:

- Immobilise the truck.
- Lower the load arms.
- Switch off the ignition and remove the key.
- Press in the emergency off switch.
- Open the battery hood.
- Unclip the hood from the fixed screw (1). Place it on the forks.
- Disconnect the battery connector located under the dashboard.
- Place the connector on the battery cells.

▷

– Unlock the door that is not attached to the side of the battery by lifting the latch (1). Hold the door (2) to prevent it falling.

▷

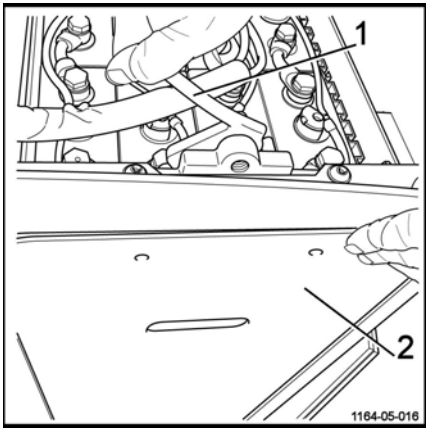

– Remove the door (2) (if this option is selected) and place it to one side.

– Position the truck with extraction rollers or the roller frame (4) in the upright position near the battery compartment on level ground.

▷

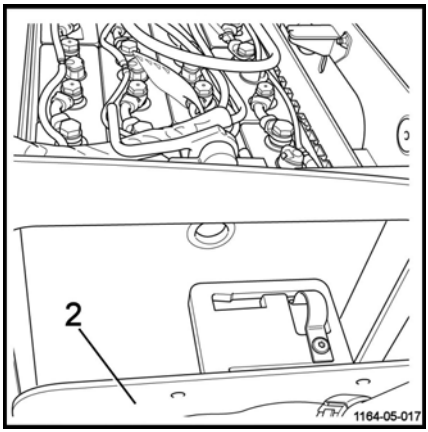

– Operate and pull the locking handle (2) in the direction indicated by the arrow. ▷

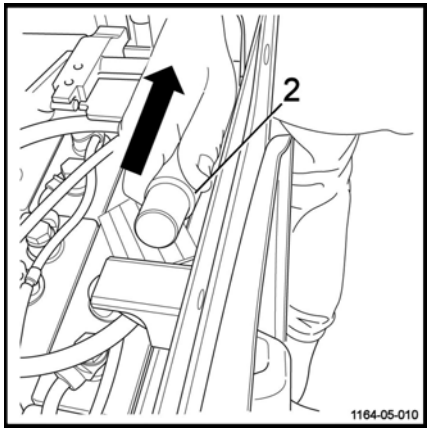

– Lift the locking bar (3) until the battery is freed. ▷

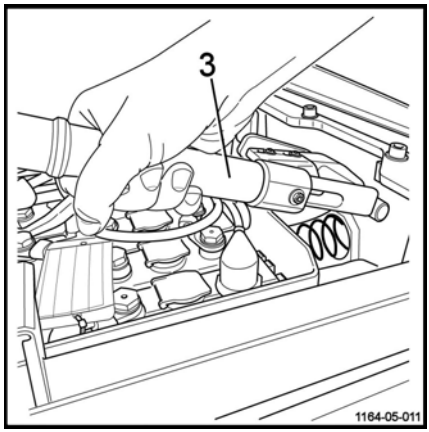

– Pull the battery onto the truck with extraction rollers or the roller frame. ▷

– Replace the battery. Remove the discharged battery and position a charged battery on the roller frame.

– Position the truck with extraction rollers or the roller frame (4) in the upright position next to the battery compartment.

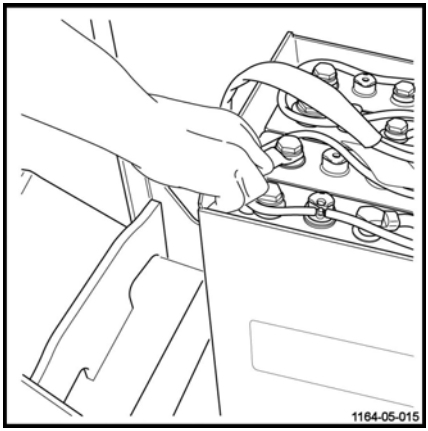

– Push the battery into the compartment. ▷

⚠ DANGER

Risk of trapping fingers

Push the battery from the rear side (A) of the battery. Take care not to trap your fingers by pushing from the top or the side of the battery.

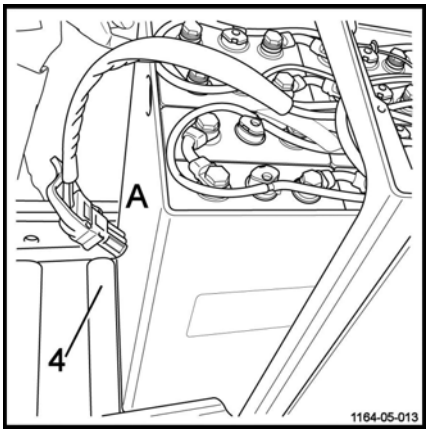

– Push until a click is heard. The battery is correctly installed. ▷

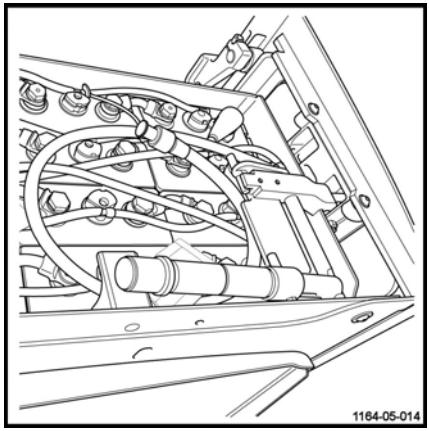

WARNING

Risk of injury

Ensure that the battery is in the end position and that the hook is correctly holding the battery.

DANGER

Risk of injury

The battery is correctly positioned but is not yet locked.

– Lower and lock the handle (2) of the locking bar (3) in the direction indicated by the arrow. The locking bar must be horizontal and must be right up against the stop (5). ▷

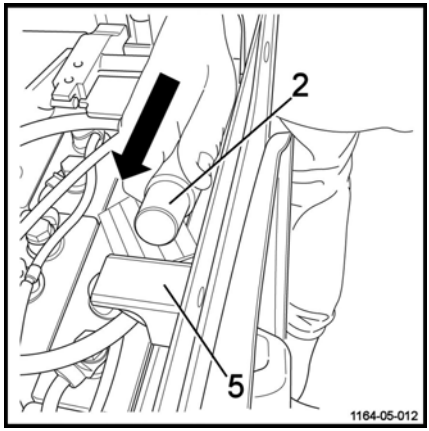

CAUTION

Risk of locking the battery incorrectly

The locking bar should not in any circumstances be positioned under or on top of the stop. It must be positioned against the stop.

– Reconnect the battery connector.

– Lower the latch of the battery compartment door (if this option is selected). The door that is not attached to the side of the battery must be correctly locked.

– Refit the battery hood.

– Return the truck to service.

⚠ WARNING

Risk of injury

Before restarting the truck, ensure that the battery is correctly installed. Check that the battery is locked and that the battery hood is closed.

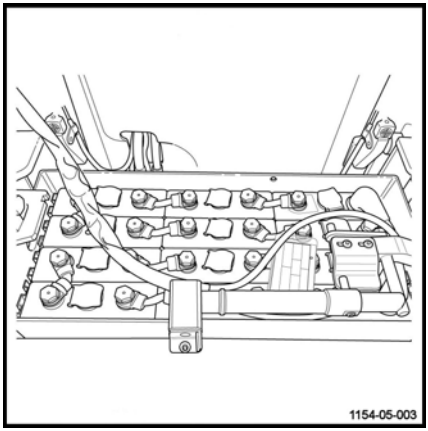

Handling the truck in an emergency

Truck towing procedure

It is not possible to tow the truck with no electrical function. The electromagnetic brake remains in the closed position.

Truck towing is authorised with a rigid connection (tow bar) if the truck to be towed can no longer be braked. Check that the towing vehicle is sufficiently powerful to pull and brake the truck being towed.

Moving with no battery

NOTE

In the event of an electrical fault or no battery, it is possible to unlock the brake manually.

CAUTION

This procedure must be carried out by authorised personnel.

- Unload the fork arms, then disconnect the battery.
- Remove the engine cover.
- Two M5 X 35 screws (1) are required.
- Screw the screws (1) to the brake (2) in the holes (3). The brake is then unlocked.

CAUTION

The truck must only be towed at low speeds.

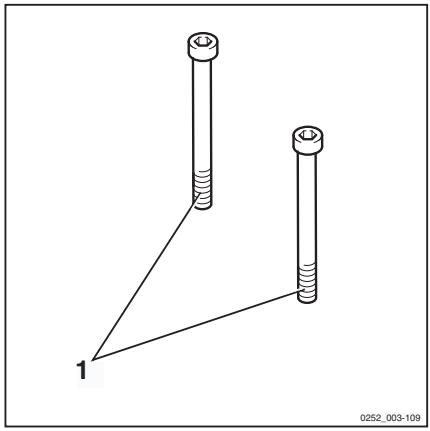

- After towing, chock the truck to prevent it from moving.
- To re-establish brake operation, unscrew and remove the two screws (1).
- Refit the covers.

⚠ WARNING

It is essential that the covers are correctly refitted before the machine is used.

▷

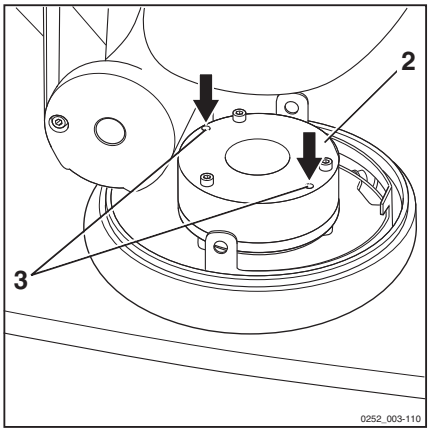

Handling the truck in specific situations

Slinging the truck

▷

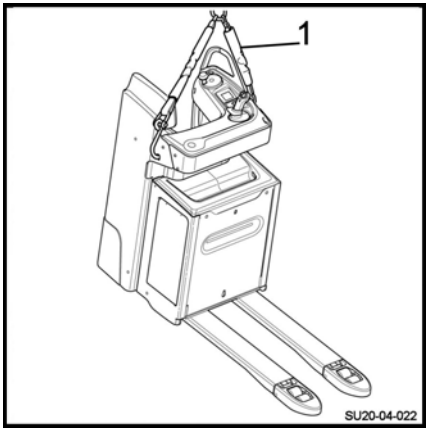

DANGER

Danger of truck falling

Only use slings (2) or a hoist of sufficient quality. Check the weight of the machine (including battery) in order to choose a suitable device. Refer to the technical data.

Observe the following instructions:

- Immobilise the truck.
- Lower the load arms.
- Switch off the ignition and remove the key.
- Press the emergency off switch.
- Remove any items that could fall.
- Protect all parts that come into contact with the lifting device (1).
- Hook the lifting device (1) onto the sling hook only.
- Lift the truck slowly and carefully.

NOTE

Never sling the truck by the control unit or other points not designed for this.

DANGER

Risk of falling

Personnel must not stand under or near the truck when slinging the truck.

Lifting the truck

▷

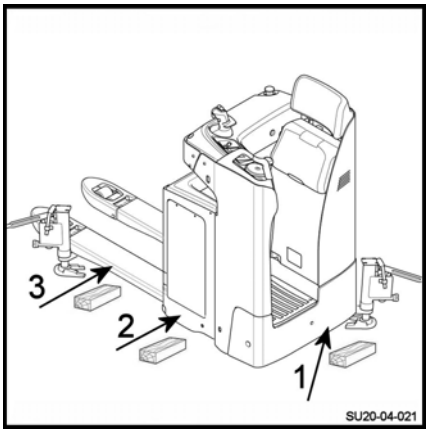

DANGER

Danger of swinging

Truck lifting must be performed carefully.

For certain types of work, it is necessary to lift the truck:

– Use a jack with adequate lifting capacity.

Front section of the truck:

– Place the jack under the chassis (1).

For work on the lifting device:

– Position the jack under the battery frame (2).

Servicing the load wheels:

– To service the load wheels, the jack must be positioned under the load arms in the locations indicated (3).

As a safety precaution, always insert a wooden chock.

WARNING

Risk of truck falling

Immobilise and chock the truck after lifting it.

Transporting the truck

CAUTION

Always switch off the ignition and disconnect the battery.

Never tie down or sling the truck by the control unit or other points not designed for this.

CAUTION

Risk of damage to the truck.

Use a hoist and woven **NON METALLIC** slings with an adequate lifting capacity. Refer to the load weight shown on the truck's capacity plate.

The lifting operations must be performed by qualified personnel.

Trucks are generally transported by road or by rail.

The truck must be suitably protected from the effects of the weather during transport and storage.

To load or unload the truck, use an inclined plane or a mobile ramp.

If the truck is out of service or if the battery has been removed, sling the truck. See **Chapter 4 Slinging the truck**.

DANGER

Danger of death.

Do not stand within the hoist's operating radius or below the lifted truck.

Transporting the truck in the lift

The truck must only be taken in lifts with an adequate loading capacity that are designed for this purpose, and for which authorisation has been received from the operator. Inside the lift, the truck must be immobilised so that no part is in contact with the wall of the lift cage.

A minimum safety distance of 100 mm from the walls of the lift must always be observed.

Anyone transported with the truck must only enter the lift after the truck has been correctly immobilised and they must exit the lift first.

Driving on loading bridges

Before crossing a loading bridge, the operator must make sure it is properly attached and secured and its load capacity is sufficient. Cross the loading bridge slowly and carefully. The driver must be sure that the vehicle to be entered is secured sufficiently against movement and that it can support the load of the forklift truck.

The lorry driver and lift truck operator must coordinate the departure time of the lorry.

5

Maintenance

General maintenance information

General

The following instructions contain all the information required for maintenance of your truck.

Carry out the various maintenance work in compliance with the maintenance plan. This will ensure that your truck is reliable and in good working order and that the warranty remains valid.

Maintenance plan

One of the display functions indicates the truck's hours of use. Refer to and consult the truck's maintenance plan.

The maintenance plan is followed by advice to facilitate work.

Maintenance intervals must be reduced if the truck is used under harsh conditions (extreme heat or cold, large quantities of dust).

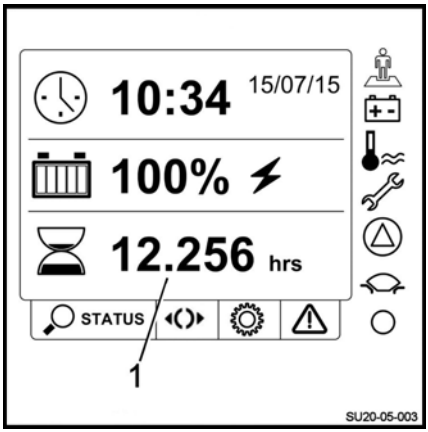

Grade and quantity of lubricants and other consumables

Only lubricants and other consumables specified in these operating instructions are authorised for use in maintenance work.

Lubricants and other consumables required for truck maintenance are listed in the maintenance specifications table.

- Never mix different grades of grease or oil. If it is absolutely necessary to change brands, make sure to flush thoroughly beforehand.
- Before changing any filters or working on the hydraulic system, thoroughly clean the surface and the areas around the part.
- All containers used to pour oil must be clean.

Servicing and maintenance personnel training and qualification

Truck maintenance must only be carried out by qualified and authorised personnel.

The annual inspection for prevention of accidents at work must be carried out by a person qualified to do so. The person carrying out this inspection must provide their expertise and opinion without being influenced by economic factors or company internal issues. Safety is the only critical deciding factor.

The person responsible for carrying out the inspection must have sufficient knowledge and experience to be able to assess the condition of the truck and the efficiency of the protective installations in accordance with the technical regulations and principles established for checking industrial trucks.

Battery maintenance staff

Batteries must only be recharged, maintained and changed by specially trained personnel. Personnel must follow the manufacturer's instructions of the battery, the battery charger and the truck.

It is essential to follow the battery maintenance instructions and the battery charger operating instructions.

Maintenance operations that do not require special training

Simple maintenance operations such as checking the hydraulic fluid level or checking the battery electrolyte level can be carried out by persons with no special training.

A specific qualification is not necessary.

Refer to the maintenance section of this manual for further information.

Ordering spare parts and consumables

Spare parts are provided by our spare parts service department. You will find the information required to place an order in the spare parts and fitting catalogue.

Only use spare parts recommended by the manufacturer.

Unauthorised spare parts may increase the risk of accidents due to faults relating to quality or incorrect choices. Anyone who uses non-compliant spare parts must assume full responsibility in the event of an accident.

Safety guidelines for maintenance

Servicing and maintenance measures

To avoid accidents during servicing and maintenance operations, take all necessary safety measures. For example:

– Ensure that there is no risk of the truck moving or starting up unexpectedly. For this reason, remove the battery connector.

Working on the electrical equipment

Operations on the truck's electrical system must only be carried out when there is no voltage supply.

Operating checks, testing and adjustment work on parts supplied with voltage must only be carried out by personnel:

- who have received detailed instructions
- who have been authorised to perform this work
- who have taken the necessary precautionary measures.

Rings, metal bracelets etc., must be removed before carrying out any operations on electric components.

Remove the electric equipment (which comprises electric components such as the traction controller) before carrying out any welding operations. This precaution prevents this electric equipment from being damaged.

Operations on the electric system require the consent of the manufacturer.

Safety devices

After any repair or maintenance work, it is necessary:

- to refit all safety devices
- to check these for correct operation.

Recommended lubricants

⚠ CAUTION

Damage to equipment if non-recommended lubricants are used.

Only use recommended lubricants. Only the lubricants listed below are approved by the manufacturer. Do not mix lubricants. If in doubt, please contact the After-Sales Service Centre.

Hydraulic oil

Recommended oil for standard use:

ISO-L-HM 46 as per ISO 6743-4 or ISO VG46-HLP as per DIN 51524-2

Recommended oil for heavy-duty use:

ISO-L-HM 68 as per ISO 6743-4 or ISO VG68-HLP as per DIN 51524-2

Recommended oil for the cold store version:

ISO-L-HM 32 as per ISO 6743-4 or ISO VG32-HLP as per DIN 51524-2

Transmission oil

Recommended oil:

SAE 85W 90 API GL4

Aerosol can for chains

Standard chain spray

Grease for pinion gear and steering ring

⚠ CAUTION

Follow the maintenance and safety guidelines.

Multi-purpose grease

Lithium soap grease with EP agents and MoS 2**KPF 2N - 20** complying with the standard DIN 51825.

ENVIRONMENT NOTE

Used oil must be stored safely until it is disposed of in accordance with environmental regulations. No one should have access to the used oil. Do not dispose of used oil in drains or allow it to penetrate soil.

Technical data for inspection and maintenance

Assembly	Consumables/lubricants	Capacities/Adjustment values
Hydraulic system	Hydraulic oil	0.6 l (working capacity)
Transmission gear	Transmission gear oil	1.5 l
Traction motor (3 kW)	1F1 fuse	Power: 300 A, quantity: 1
ES30-24 steering unit (0.185 kW S1)	3F1 fuse	Power: 40 A, quantity: 1
Pump motor (1.2 kW)	1F1 fuse	Power: 300 A, quantity: 1
Control fuse	1F3 fuse	Control: 7.5 A, quantity: 1
Control fuse	1F4 fuse	Control: 5 A, quantity: 1
Battery	Distilled water	As required
Joints	Lithium soap grease	As required

Accessing the technical compartment

Accessing the technical compartment

In order to perform maintenance on various truck components, it is necessary to access the technical compartment

- Immobilise the truck.
- Lower the fork arms.
- Switch off the truck (key or electronic key).
- Press the emergency off switch.
- Disconnect the battery connector.
- Lift the backrest.
- Remove the mounting screw (1) at the bottom of the door.

▷

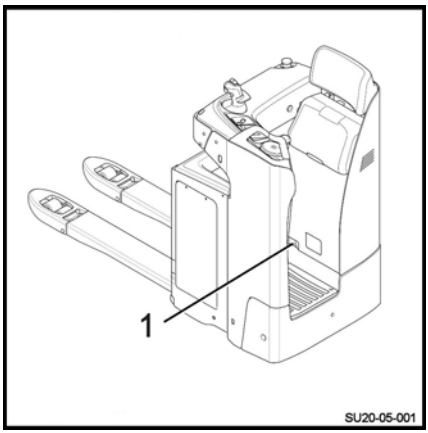

– Open the technical compartment door (2).

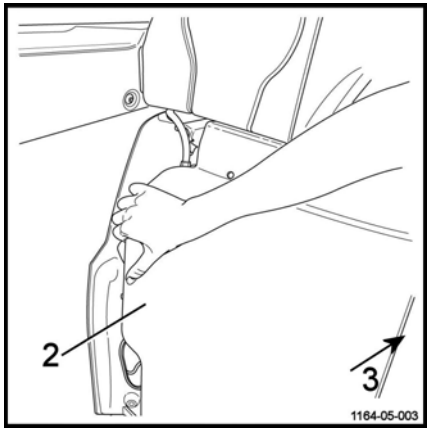

It is now possible to access the technical compartment. You must close the technical compartment door after the operation is finished.

– Close the technical compartment door (2).

⚠ CAUTION

Risk of trapping fingers

Take care not to trap your fingers between the door and the chassis.

Be careful not to trap your fingers in the external hinges (3).

– Refit the mounting screw (1).

– Reconnect the battery connector.

– Return the truck to service.

Maintenance plan as required

Depending on the application, environmental conditions and driving style, the following procedures should be carried out as required
Chassis, bodywork and fittings
Clean the truck
Wheels
Check the condition of the wheels
Electrical equipment
Checking the condition of the battery and the battery cable
Clean the battery and the battery compartment
Check the fuses

1000-hour/annual maintenance plan

Depending on the application, environmental conditions and driving style, the following procedures should be carried out every 1000, 2000, 4000, 7000 and 8000 hours
Preparation
Clean the truck
Check the error codes using the diagnostic tool
Chassis and equipment
Check the condition of the forks
Check the electromagnetic brake
Check and lubricate the hinges
Check the pump motor brushes for wear
Wheels
Check the tightness of the wheels
Check the stabilisers
Electrical equipment
Check the condition and correct positioning of the truck and battery cables
Check the electrical insulation between the chassis and the electric components
Check the battery acid level and the electrolyte level
Hydraulics
Check the hydraulic oil level

3000-hour/two-year maintenance plan

Depending on the application, environmental conditions and driving style, the following procedures should be carried out every 3000, 6000 and 9000 hours
Information
Carry out all 1000-hour maintenance work

5000-hour maintenance plan

Depending on the application, environmental conditions and driving style, the following procedures should be carried out every 5000 and 10,000 hours
Information
Carry out all 1000-hour maintenance work
Carry out all 3000-hour maintenance work
Motor
Drain the transmission gear oil
Hydraulics
Drain the hydraulic oil

Chassis, bodywork and fittings

Cleaning the truck

Cleaning instructions

– Park the truck.

– Press the emergency off switch.

⚠ CAUTION

Electrical hazards

The battery must always be disconnected during cleaning procedures.

Washing the outside of the truck

⚠ WARNING

Risk of damage to the truck.

– Do not use flammable liquids to clean the truck.
– The safety rules set out above must be followed to prevent spark formation. They could lead to a short circuit.
– All components that are sensitive to moisture (particularly electric components) must be protected when the truck is cleaned.
– Follow the manufacturer's instructions when using the cleaning product.

– Clean the truck with a non-flammable cleaning product mixed with water, a sponge and cloths.

– Specifically clean the oil filler holes and surrounding area as well as the lubricating nipples (before lubrication).

NOTE

A frequently cleaned truck must be lubricated more regularly.

Cleaning the electrical installations

⚠ WARNING

Electrical hazards

Do not expose electrical equipment (especially motors) to direct jets.

NOTE

- *Only use dry cleaning products*
- *Do not remove the cowlings*

– Clean the electrical installations with a non-metal brush and dry with lightly compressed air.

After washing

– Carefully dry the truck (e.g. with compressed air).

⚠ WARNING

Use of compressed air

It is advisable to wear protection goggles and a mask.

– Restart the truck in accordance with the instructions.

NOTE

If, despite taking precautions, traces of moisture remain in the motor, dry it using compressed air. After having eliminated any traces of moisture, the truck may be reactivated. Do not do so before then to prevent any corrosion.

General information on battery maintenance

⚠ DANGER

Risk of injury

Before carrying out any operations on the electric installation, turn the truck power supply off. Disconnect the battery connector.

Precautions to be taken during battery maintenance

The plugs on the battery cells must always be dry and clean.

Neutralise any spilt battery acid immediately.

The battery terminals and lugs must be clean, lightly covered with grease for terminals and securely tightened.

Charging the battery

During the charging process, the surface of the battery cells must be clear to ensure sufficient ventilation.

Do not place metal objects on the battery.

The battery cover must remain open during charging. See the chapter entitled **Battery charging using an external charger.**

Battery type

Lead or gel batteries are used. It is advisable to choose a compatible charger.

Before charging, ensure that the charger is suitable for the type of battery.

⚠ CAUTION

Gel batteries are subject to specific charging, maintenance and treatment instructions. A non-compatible charger may result in a battery failure.

Observe the manufacturer's recommendations.

NOTE

- *The discharge indicators used to check the battery must also be suitable for the type of battery*
- *Contact the relevant After-Sales Service Centre*

Charging the battery

– Park the truck in an area without condensation or pollution and with sufficient ventilation.

– Stop the truck.

– Press the emergency off switch.

– Open the battery hood.

– Follow the instructions.

⚠ CAUTION

Do not expose the charger to water, rain, oils, grease or any similar substances.

The charger becomes hot during the operation.

⚠ CAUTION

Risk of injury

Do not obstruct the ventilation. Allow the charger to cool down for 10 minutes after charging is complete before touching it. Do not use the charger out of the truck.

Checking the condition of the load arms

▷

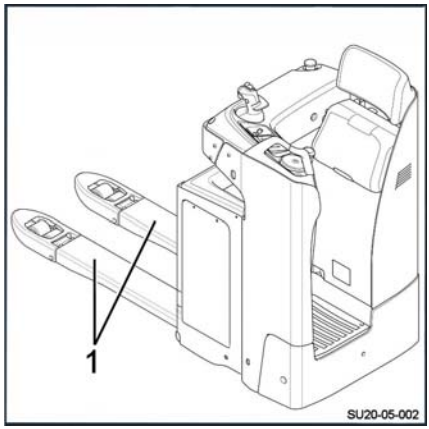

– Check that the load arms (1) show no signs of deformation, splits, cracks or heavy wear

Steering and wheels

Maintaining the wheels and rollers

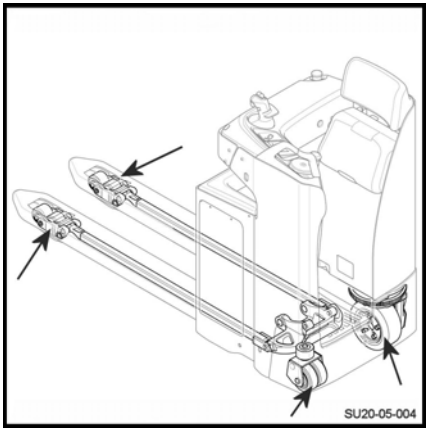

The tyre treads on the drive wheel, stabilising wheels and rollers should show no signs of deterioration.

- Raise the truck until the wheels are off the ground.
- Check that the wheels rotate freely and remove any objects that may prevent them from turning or may obstruct them.

NOTE

Contact the After-Sales Service Centre regarding the replacement of wheels and rollers.

Electrical equipment

Cleaning and blowing out the electrical components

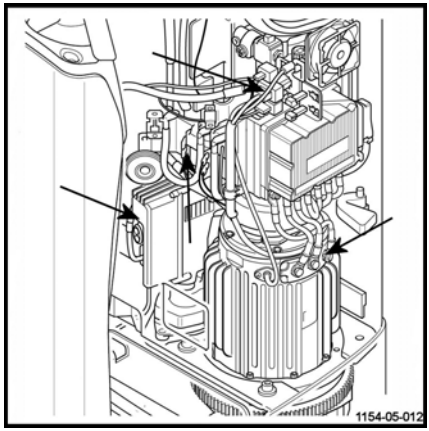

CAUTION

Electrical hazards

Always disconnect the battery connector before working on an electrical component.

- Press in the emergency off switch.
- Disconnect the battery connector.
- Open the technical compartment hood.
- Blow the electrical components with compressed air.

WARNING

Use of compressed air

It is advisable to wear protection goggles and a mask.

- Check the condition of the cable harness connector pins.

Checking the fuses

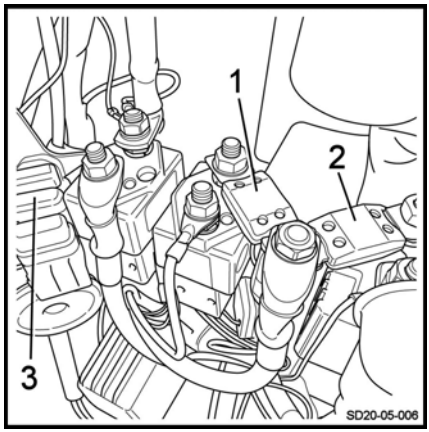

CAUTION

Electricity danger

Before carrying out any work on the electric installation, turn the power supply off. Disconnect the battery connector for this purpose.

- Park the truck.
- Switch off the truck and press the emergency off switch.
- Disconnect the battery connector from the fixed socket on the truck.
- Open the door of the technical compartment to access the fuses.
- Check that the following two fuses are correctly secured:

The 300 A fuse (1) protects the traction and lift power circuit.

The 40 A fuse (2) protects the steering circuits.

The 5-A fuse (3) and 7.5-A fuse protect the control circuit.

This operation should preferably be carried out by the After-Sales Service Centre.

Checking the battery acid level and electrolyte density

NOTE

Remove the battery from its compartment to check the water level.

WARNING

The electrolyte (diluted sulphuric acid) is poisonous and corrosive.

- Always wear suitable protective equipment (industrial protection goggles, safety gloves) when working on a battery.
- Never wear a watch or jewellery when handling battery acid.
- Do not allow any acid to get onto the clothing or skin or into the eyes. If this does happen, rinse immediately with plenty of clean water.
- Immediately rinse away any spilled battery acid with plenty of water.
- In case of injury, seek medical advice immediately.
- Always follow the safety information provided by the battery manufacturer.
- Comply with the regulations in force.

- Check the battery acid level and electrolyte density according to the battery manufacturer's recommendations.
- The cell covers of the battery must be kept dry and clean.
- Any spillage of battery acid must be neutralised immediately.

ENVIRONMENT NOTE

Dispose of any used battery acid in accordance with the regulations.

Checking the condition of cables, terminals and the battery connector

▷

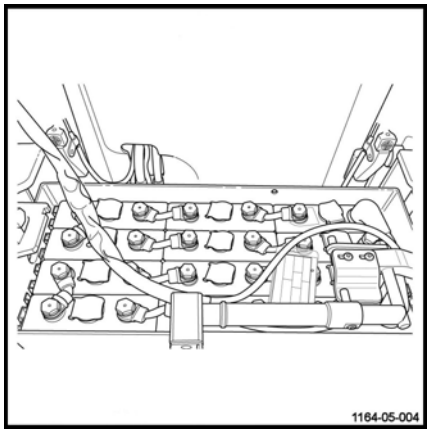

- Check that the cable insulation is undamaged.
- Check that there are no signs of heat build-up in the connections.
- Check that the "+" and "-" output terminals are not sulphated (presence of white salt).
- Check the condition of the battery connector contacts and the presence of the keying pin.

⚠ CAUTION

Risk of damaging the equipment.

The points mentioned above can cause serious incidents. In the event of an incident, contact our After-Sales Service Centre as quickly as possible.

Hydraulic systems

Checking the hydraulic system for leaks

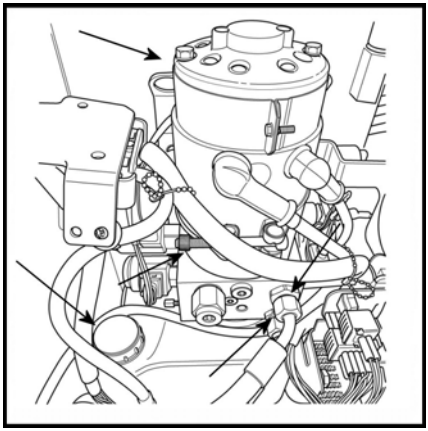

- Switch off the truck and disconnect the battery connector.
- Open the technical compartment door.
- Inspect the hydraulic system: pipes, hoses and connections between the pump-motor unit and the cylinders.
- Check the cylinders for leaks.
- Check that the hoses are attached correctly and show no signs of friction wear.
- Check the external pipes and hoses on the technical compartment.
- Close the technical compartment door.
- Return the truck to service.

⚠ CAUTION

Risk of damaging the truck

In the event of leakage, please contact the After-Sales Service Centre.

Checking the hydraulic oil level

To check the hydraulic oil level, proceed as follows:

- Immobilise the truck.
- Lower the forks.
- Switch off the ignition and remove the key.
- Press in the emergency off switch.
- Disconnect the battery connector.

– Open the technical compartment door. ▷

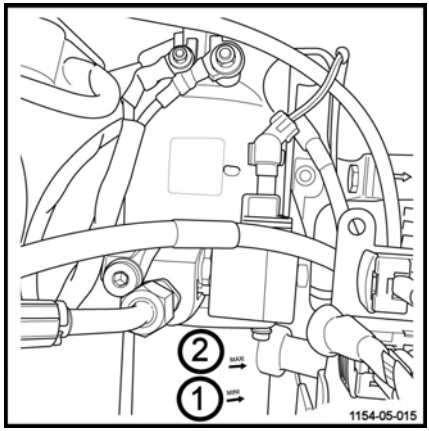

To ensure proper usage of the truck functions, the oil level must be between the minimum (1) and maximum (2) marks on the tank.

– Remove the plug. If necessary, top up via the opening.

– Refit the plug afterwards.

⚠ CAUTION

Risk of damage to hydraulic components

Only use hydraulic oil that complies with the manufacturer's specifications (see table of recommended lubricants).

– Close the technical compartment door.

– Reconnect the battery connector.

– Restart the truck.

Storage and putting out of commission

Storage of truck

Precautions should be taken if the truck must not be used for a reasonably long period. The operations depend on the length of time it is unused.

Long-term truck storage

The following work must be carried out on the truck to prevent corrosion if it needs to be stored for a long period of time. If the truck is to be stored for more than two months, it must be positioned in a clean and dry area. The area must be well-ventilated with no risk of freezing.

The following operations must be performed:

- Clean the truck thoroughly.
- Check the hydraulic oil level and refill if necessary.
- Lower the forks onto a suitable support (e.g. a pallet) until the chains are slack.
- Coat any unpainted metal parts with a thin layer of oil or grease.
- Grease all hinges and joints.
- Check battery condition and electrolyte density. Maintain the battery in accordance with the manufacturer's requirements. (Follow the instructions).
- Spray contacts with an aerosol product designed for contacts.
- Raise and chock the truck: the wheels must not touch the ground in order to prevent irreversible deformation of the tyres.
- Cover the truck with a cotton cover to protect it from dust.

⚠ CAUTION

We recommend that you do not use a plastic sheet as this encourages condensation to form.

Consult the service department for further measures to take if the truck must be stored for a longer period of time.

Recommissioning after storage

If the truck has been stored for more than six months, it must be checked carefully before being recommissioned. This check is similar to the workplace accident prevention inspection. It is therefore necessary to check all points and systems that are important for truck safety.

Carry out the following operations:

- Clean the truck thoroughly.
- Grease all hinges and joints.
- Check the condition and density of electrolyte, and, if necessary, recharge the battery.
- Check that there are no traces of condensation water in the hydraulic oil. Drain if necessary.
- Carry out the same maintenance work as for the first time it was commissioned.
- Commission the truck.
- In particular, check the following during start-up:

• traction, control and steering.
• brakes (service brake and parking brake).
• lifting device.

Permanent Putting Out of Commission (Destruction)

When scrapping the truck, it is necessary to:

- Remove the various parts of the truck (covers, battery, chains, motors etc.)
- Sort out the components depending on their type: pipes, rubber components, lubricants, aluminium, iron etc.
- Before scrapping the truck, notify the competent authorities of your country in writing.
- After receiving the authorisation from the competent authorities, remove any components according to national standards.

NOTE

The client is solely responsible for any irregularities he has committed during or after the scrapping of the truck's components and the removal of components.

6

Technical features

SXH 20 datasheet

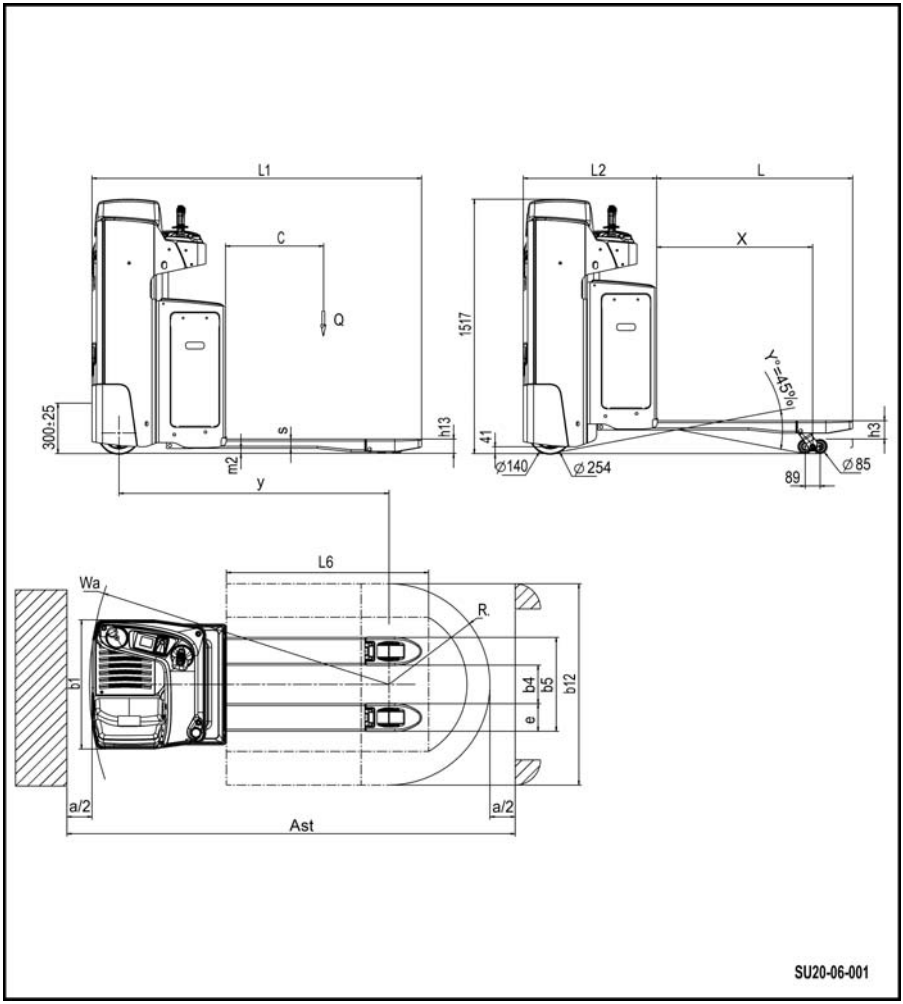

DESCRIPTION			
1.1	Manufacturer		STILL
1.2	Model type		SXH 20
1.3	Method of propulsion: battery, diesel, petrol, LPG, mains power		Battery
1.4	Driving: manual, pedestrian, standing, seated, order picking		Standing
1.5	Nominal capacity	Q (kg)	2000
1.6	Centre of gravity	c (mm)	600
1.8	Distance from load wheel axle to load mating face (±5 mm) (5)	x	965
1.9	Wheelbase (±5 mm) (5)	y	1603

WEIGHT			
2.1	Kerb weight with battery (±10%) (4)	kg	848
2.2	Load per laden axle, drive side/load side (±10%) (3) Load = 2000 kg	kg	1075/1773
2.3	Load per unladen axle, drive side/load side (±10%) (3)	kg	672/176

WHEELS			
3.1	Drive side/load side tyres: (Polyurethane: P, Rubber: R) Drive side/load side		R+P/P
3.2	Drive wheel dimensions	Ø x l (mm)	Ø 254 x l 102
3.3	Wheel dimensions, load side	Ø x l (mm)	Ø 85 X l 105 (Ø 85 x l 80)
3.4	Additional wheels	Ø x l (mm)	2 x Ø 140 X l 50
3.5	Number of wheels at drive side/load side (x = drive wheel)		1x + 1/2 (1x + 1/4)
3.6	Drive side track width (±5 mm)	mm	484
3.7	Load side track width (±5 mm)	mm	395

DIMENSIONS			
4.4	Lift (±5 mm)	h3 (mm)	125
4.15	Height at the ends of the forks and on lower load mating face (±5 mm) (5)	h13 (mm)	88
4.19	Total length (±5 mm) (6)	L1 (mm)	1956
4.20	Length to the load mating face (±5 mm) (6)	L2 (mm)	800
4.21	Total width (±5 mm)	b1 (mm)	770

4.22	Fork arm dimensions	s/e/L (mm)	55/165/1150
4.25	Outside fork arm spread (±5 mm)	b5 (mm)	520/540/560/680
4.32	Ground clearance at centre of wheelbase (±2 mm)	m2 (mm)	30
4.33	Dimension of the b12 x L6 load	b12xL16 (mm)	800 x 1200
4.34	Aisle width with predetermined load (2)(7)	Ast (mm)	2215
4.34.2	Aisle width with an 800 x 1200 pallet crosswise (2)(8)	Ast (mm)	2580
4.35	Turning radius (minimum) (±20 mm) (1)	Wa (mm)	1710/1780

PERFORMANCE DATA			
5.1	Travel speed, laden/unladen (±5%)	km/h	10/12
5.2	Lifting speed, laden/unladen (±10%)	m/s	0.036/0.043
5.3	Lowering speed, laden/unladen (±10%)	m/s	0.064/0.06
5.8	Maximum gradient, laden/unladen	%	15/20
5.10	Service brake		electromagnetic

DRIVE SYSTEM			
6.1	Traction motor, hourly output	kW	3
6.2	Lift motor at 15% utilisation	kW	1.2
6.3	Battery type in accordance with DIN 43531 / 35 / 36		3PzS side access
6.4	Battery voltage and capacity (discharge in 5 hours)	V/Ah	24/375
6.5	Battery weight (±10%)	(kg)	290
6.6	Energy consumption according to standardised VDI cycle	kWh/1h	0.4
6.7	Turnover output	T/h	146
6.8	Energy consumption at turnover output	kWh/1h	1.5

MISCELLANEOUS			
8.1	Speed control		LAC controller
10.7	Noise level at operator's ears	dB (A)	65
	Level of vibration felt by the operator (EN 13059)	m/s^2	0.74

(1) Forks raised/lowered

(2) Calculation with Wa (forks lowered)

(3) Weight according to line 2.1

(4) With battery line 6.5

(5) In lowered position

(6) Add 75 mm for 4 PzS

(7) Ast = Wa + L6 - X + a

(8) Ast = Wa + R + a

Safety distance a = 200 mm

A

Accessing the technical compartment . . . 85
Address of manufacturer I
Aerosol can for chains 83

B

Batteries 30
Battery
- Closing the battery hood 65
- Opening the battery hood 65
- Type 64

Battery acid 12
Before picking up a load 59
Behaviour when driving 43
Braking 30, 45
Braking by releasing the drive switch 33, 46
Braking by reversing the drive direction 33, 46

C

CE labelling 2
Changing the side access battery 68
Charging the battery 91
Charging the battery using an external charger 66
Checking the battery acid level and electrolyte density 95
Checking the battery cables, terminals and connector 96
Checking the brakes 33
Checking the condition of the load arms . 92
Checking the fuses 94
Checks prior to start-up 31
Cleaning the truck 90
Climatic conditions 6
cold store 61
Cold store usage 61
Commissioning 32
Consumables 11
- Battery acid safety instructions 12
- Disposal 13
- Oil Safety Information 11
- Safety information for handling hydraulic fluid 12

Contact details I
Copyright and property rights 2

D

Defining directions 44
Description of use 6
Destruction 100
Display operating unit 25
Display unit
- Activity indicator 40
- Drive programme 40
- Error codes menu 41
- Managing battery charging 39
- Operator present 38
- Settings 39
- Settings menu 41
- Start-up screen 42
- Temperature 39
- Warnings 39

Displaying the drive wheel position 38
Disposing of components and batteries . . . 7
Drive program
- Blue Q mode 47
- Hare mode 47
- Tortoise mode 47

Drive system 30
Driver rights,duties and rules of behaviour 16
Driver’s compartment 22, 30
Drivers 16
Driving 44
Driving on loading bridges 78
Driving on upward and downward slopes 48
Driving safety guidelines 43

E

EC declaration of conformity 3
Electrical equipment
Cleaning and blowing out the components. 94
Electromagnetic braking 46
Electronic key (option) 23
Emergency off switch 32
Entering/exiting the truck 35

F

Features 30
FleetManager™
Colour code for the LEDs 52
Commissioning a truck equipped with a keypad or an electronic key . 51
Commissioning a truck equipped with an RFID reading device 51
Description 50
Disconnecting a truck equipped with a keypad or electronic key . . . 54
Disconnecting a truck equipped with an RFID reading device 55
Disconnecting the truck 54
Start-up 51

G

General 2, 80
General information on battery maintenance 91
Grade and quantity of lubricants and other consumables 80
Grease for pinion gear and steering ring . 83

H

Handling a single load 59
Horn 33
Operating the horn 46
Hydraulic fluid 12
Hydraulic oil 83
Hydraulic system
Checking the hydraulic oil level 97
Checking the hydraulic system for leaks 97

I

Identification label 4

L

Labels 26
Lift control elements 58
Lifting the truck 77
Load handling safety rules 56

M

Maintaining the wheels and rollers 93
Maintenance plan 80
1000-hour/annual 88
3000 hours/every two years 88
5000 hours 89
As required 87
Multi-purpose grease 83

N

Noise emission values 14

O

Oils 11
Operating company 15
Operator presence pedal 36
Order picking 64
Ordering spare parts and consumables . . 81
Overview 20
Overview of the technical compartment . . 21

P

Park the truck. 63
Permanent Putting Out of Commission . 100
Permissible use 6
Picking up a load from the ground 59
Precautions to be taken during battery maintenance 91

Prohibition of use by unauthorised persons 16

R

Recommended lubricants 83
Residual dangers, residual risks 15
Restarting work 63

S

Safety devices 82
Safety Inspection 17
Selection buttons 37
Serial number 27
Servicing and maintenance measures . . 82
Setting a load down on the ground 60
Slinging the truck 76
Specialist 16
Stability 15
Steering 30
Steering knob option 48
Stopping the truck 63
SXH 20 datasheet 102
Symbols used 7

T

Technical data for inspection and maintenance 84
Technical description 30
Transmission oil 83
Transporting a load 60
Transporting the truck 77
Transporting the truck in the lift 78
Truck operating instructions 34

U

Unauthorised use 7

V

Vibrations
Vibration characteristics for vibrations to which the body is exposed 14

W

Working on the electrical equipment 82

STILL GmbH

11548011551 EN – 07/2016