25 Years INMESOL POWER SOLUTIONS 1990 / 2015

## AL 975-CA - LOMBARDINI 25LD-425 DIESEL 3600 rpm | 60 Hz

SINGLE PHASE
120 V

# TECHNICALS SPECIFICATIONS

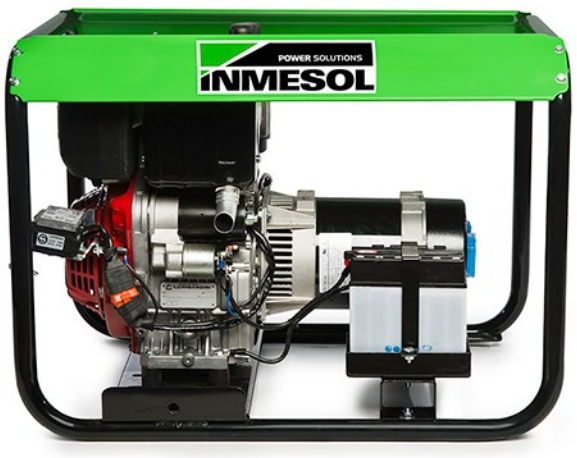


Image for guidance purposes.

Model:

# AL 975

Gen set composed of engine and alternator perfectly assembled and fitted in a practical tubular chasis, that is adding great strenght and versatility.

| STANDBY POWER: (LTP "Limited Time Power" norma ISO 8528-1) | 9,75 kVA |
|---|---|

## Genset general characteristics

| | |
|---|---|
| Standby power LTP (kVA) | 9,75 |
| Frequency (Hz) | 60 |
| R.p.m. | 3600 |
| Voltage (V) | 120 |
| (Cos ø) | 1 |

# ENGINE CHARACTERISTICS

| MAKE | MODEL |
|---|---|
| **LOMBARDINI** | 25LD-425 |

| | | | |
|---|---|---|---|
| Mechanical effect power (kWm) | 13 | Start | Automatic main failed |
| No. cylinders | 2 | Fuel | Diesel |
| Displacement (cm³) | 851 | Fuel tank capacity (L) | 4 |
| Diameter x stroke (mm) | 85x75 | Fuel comsumption 100% (L/h) | 4 |
| Compresion ratio | 19:1 | Oil tank capacity (L) | 1,8 |
| Cooling system | Air | Oil comsumption (kg/h) | 0,0085 |
| Series regulator | Mechanical | Battery V/Ah | 12/19 |

POWER SOLUTIONS INMESOL
**INMESOL**, S.L.
Ctra. de Fuente Álamo, 2 · 30153 CORVERA - Murcia · SPAIN

ESPAÑA
Teléfono: +34 968 380 129
Fax: +34 968 380 504
E-mail: ventas@inmesol.com

INTERNATIONAL
Phone: +34 968 380 879
Fax: +34 968 380 400
E-mail: sales@inmesol.com

www.inmesol.com

25 Years INMESOL POWER SOLUTIONS 1990 / 2015

# AL 975-CA - LOMBARDINI 25LD-425 DIESEL 3600 rpm | 60 Hz

SINGLE PHASE
120 V

## ALTERNATOR CHARACTERISTICS

| | |
|---|---|
| Voltage (V) | 120 |
| Frequency (Hz) | 60 |
| R.p.m. | 3600 |
| No. poles | 2 |
| Protection degree IP | 21 |
| Insulation | H |

## SOCKETS DESCRIPTION:

Depending on the market demand (optional)

## DIMENSIONS AND WEIGHT

| | |
|---|---|
| Lenght (mm) | 940 |
| Width (mm) | 545 |
| Height (mm) | 640 |
| Weight (kg) | 135 |

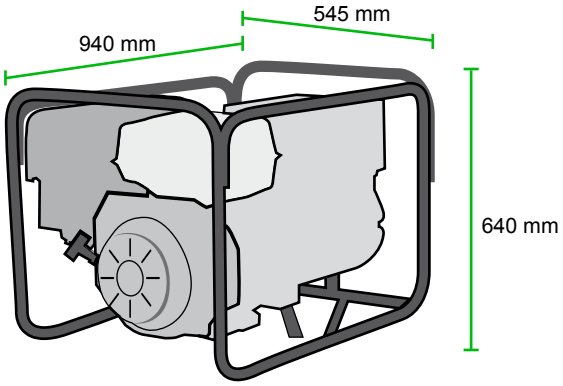


## OPTIONAL

TRANSPORT KIT

POWER SOLUTIONS INMESOL
INMESOL, S.L.
Ctra. de Fuente Álamo, 2 · 30153 CORVERA - Murcia · SPAIN

ESPAÑA
Teléfono: +34 968 380 129
Fax: +34 968 380 504
E-mail: ventas@inmesol.com

INTERNATIONAL
Phone: +34 968 380 879
Fax: +34 968 380 400
E-mail: sales@inmesol.com

www.inmesol.com

25 Years INMESOL POWER SOLUTIONS 1990 / 2015

## AL 975-CA - LOMBARDINI 25LD-425 DIESEL 3600 rpm | 60 Hz

SINGLE PHASE
120 V

# DSE 6020 AUTOMATIC CONTROL PANEL WITH LOAD TRANSFER SWITCH PANEL

PROTECTION, DISTRIBUTION AND AUTOMATIC CONTROL panel which starts the generator set when it detects a mains failure and stops it when the mains is restored with the control unit DSE 6020. It also starts and stops the group manually via a pushbutton or remote start-up by contact.

Images for guidance purposes.

It has the following:

**1** EMERGENCY STOP PUSHBUTTON

**2** PROTECTIONS

- Protection fuses for control module.

**3** BATTERY CHARGER


INMESOL POWER SOLUTIONS

**INMESOL**, S.L.
Ctra. de Fuente Álamo, 2 · 30153 CORVERA - Murcia · SPAIN

ESPAÑA
Teléfono: +34 968 380 129
Fax: +34 968 380 504
E-mail: ventas@inmesol.com

INTERNATIONAL
Phone: +34 968 380 879
Fax: +34 968 380 400
E-mail: sales@inmesol.com

www.inmesol.com

# AL 975-CA - LOMBARDINI 25LD-425 DIESEL 3600 rpm | 60 Hz

SINGLE PHASE
120 V

## 4 DSE 6020 PROTECCION CONTROL MODULE. It has a digital LCD screen, which provides easy reading of the information regarding the ENGINE, ALTERNATOR, MAINS and CHARGING.

### READINGS that can be made:

#### ENGINE:

- Cooling temperature
- Oil pressure
- Turning speed (rpm)
- Fuel level
- Battery voltage
- Battery alternator voltage
- Operating hours
- Number of start-ups

#### ALTERNATOR AND CHARGE:

- Voltages between phases and between phases and neutral.
- Intensities
- Frequency

#### MAINS:

- Frequency
- Voltages between phase and neutral (L-N)

### CONTROL of the set:

- STARTS and STOPS the set when mains failure is detected and when it is restored, respectively
- It can also operate MANUALLY or REMOTELY via contact

### Protection of the engine and alternator, with the ALARMS activated:

#### ENGINE:

- Low oil pressure
- High coolant temperature
- Low and High battery Voltage.
- Failure of the alternator to charge batteries
- Low fuel level.

POWER SOLUTIONS INMESOL
INMESOL, S.L.
Ctra. de Fuente Álamo, 2 · 30153 CORVERA - Murcia · SPAIN

ESPAÑA
Teléfono: +34 968 380 129
Fax: +34 968 380 504
E-mail: ventas@inmesol.com

INTERNATIONAL
Phone: +34 968 380 879
Fax: +34 968 380 400
E-mail: sales@inmesol.com

www.inmesol.com

# AL 975-CA - LOMBARDINI 25LD-425 DIESEL 3600 rpm | 60 Hz

SINGLE PHASE
120 V

## ALTERNATOR:

- Low and High Voltage
- Low and High Frequency
- Overload due to Intensity (A)

## MAINS:

- Low and High Voltage
- Low and High Frequency

## OTHER CHARACTERISTICS:

- The real-time clock records the last 5 events.
- Configurable inputs and outputs.
- Configurable alarms and timers.
- USB connectivity
- Fully configurable via software and PC.
- Communication via USB cable for remote control
- Programmer Clock which starts and stops the set on a weekly basis for maintenance, etc..
- ALTERNATIVE CONFIGURATIONS, which open up the working possibilities

## 5 DISTRIBUTION :

- Direct output of the magnetothermal switch.

## 6

- 2 POLES SWITCH BOARD.

POWER SOLUTIONS INMESOL
INMESOL, S.L.
Ctra. de Fuente Álamo, 2 · 30153 CORVERA - Murcia · SPAIN

ESPAÑA
Teléfono: +34 968 380 129
Fax: +34 968 380 504
E-mail: ventas@inmesol.com

INTERNATIONAL
Phone: +34 968 380 879
Fax: +34 968 380 400
E-mail: sales@inmesol.com

www.inmesol.com