25 Years INMESOL POWER SOLUTIONS 1990 / 2015

AK 600-M - KOHLER CH 395/ GASOLINE 3600 rpm | 60 Hz

SINGLE PHASE
120 V

TECHNICALS SPECIFICATIONS

Image for guidance purposes.

Model:

AK 600

Gen set composed of engine and alternator perfectly assembled and fitted in a practical tubular chasis, that is adding great strenght and versatility.

STANDBY POWER:
(LTP "Limited Time Power" norma ISO 8528-1) **6 kVA**

Genset general characteristics

Standby power LTP (kVA)	6
Frequency (Hz)	60
R.p.m.	3600
Voltage (V)	120
(Cos ø)	1

ENGINE CHARACTERISTICS

MAKE	MODEL
KOHLER	CH 395

Mechanical effect power (kWm)	6,2
No. cylinders	1
Displacement (cm^3)	277
Diameter x stroke (mm)	78x58
Compresion ratio	8,2:1
Cooling system	Air
Series regulator	Mechanical
Start	Recoil Start
Fuel	Gasoline
Fuel tank capacity (L)	7,3
Fuel comsumption 100% (L/h)	3,6
Oil tank capacity (L)	1,1

POWER SOLUTIONS INMESOL
INMESOL, S.L.
Ctra. de Fuente Álamo, 2 · 30153 CORVERA - Murcia · SPAIN

ESPAÑA
Teléfono: +34 968 380 129
Fax: +34 968 380 504
E-mail: ventas@inmesol.com

INTERNATIONAL
Phone: +34 968 380 879
Fax: +34 968 380 400
E-mail: sales@inmesol.com

www.inmesol.com

25 Years INMESOL POWER SOLUTIONS 1990 / 2015

AK 600-M - KOHLER CH 395/ GASOLINE 3600 rpm | 60 Hz

SINGLE PHASE
120 V

ALTERNATOR CHARACTERISTICS

Voltage (V)	120
Frequency (Hz)	60
R.p.m.	3600
No. poles	2
Protection degree IP	21
Insulation	H

SOCKETS DESCRIPTION:

Depending on the market demand (optional).

DIMENSIONS AND WEIGHT

Lenght (mm)	740
Width (mm)	530
Height (mm)	520
Weight (kg)	74

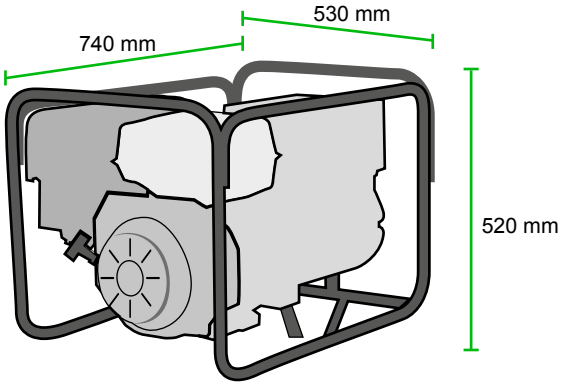

OPTIONAL

TRANSPORT KIT

POWER SOLUTIONS INMESOL
INMESOL, S.L.
Ctra. de Fuente Álamo, 2 · 30153 CORVERA - Murcia · SPAIN

ESPAÑA
Teléfono: +34 968 380 129
Fax: +34 968 380 504
E-mail: ventas@inmesol.com

INTERNATIONAL
Phone: +34 968 380 879
Fax: +34 968 380 400
E-mail: sales@inmesol.com

www.inmesol.com